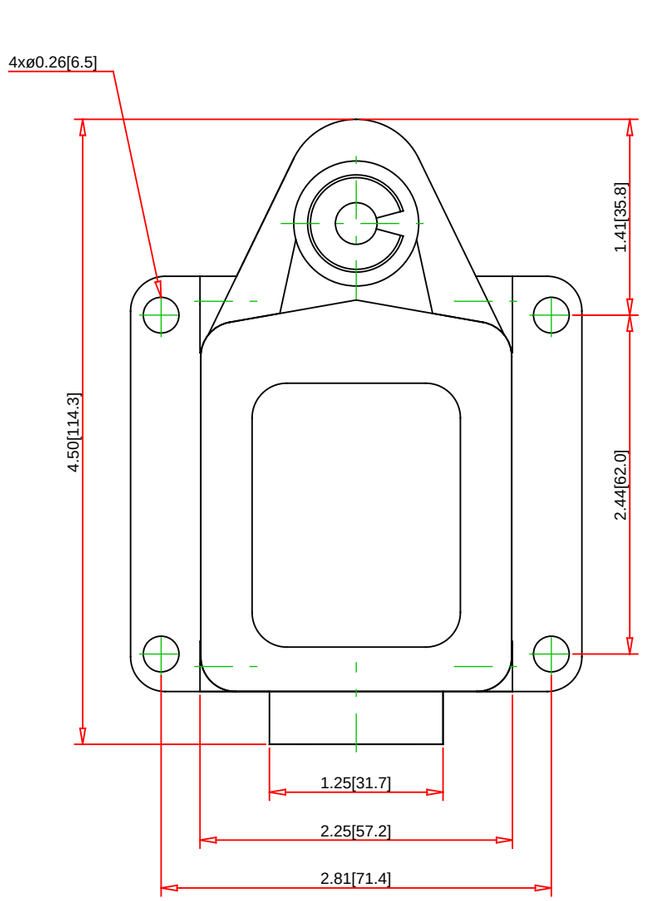

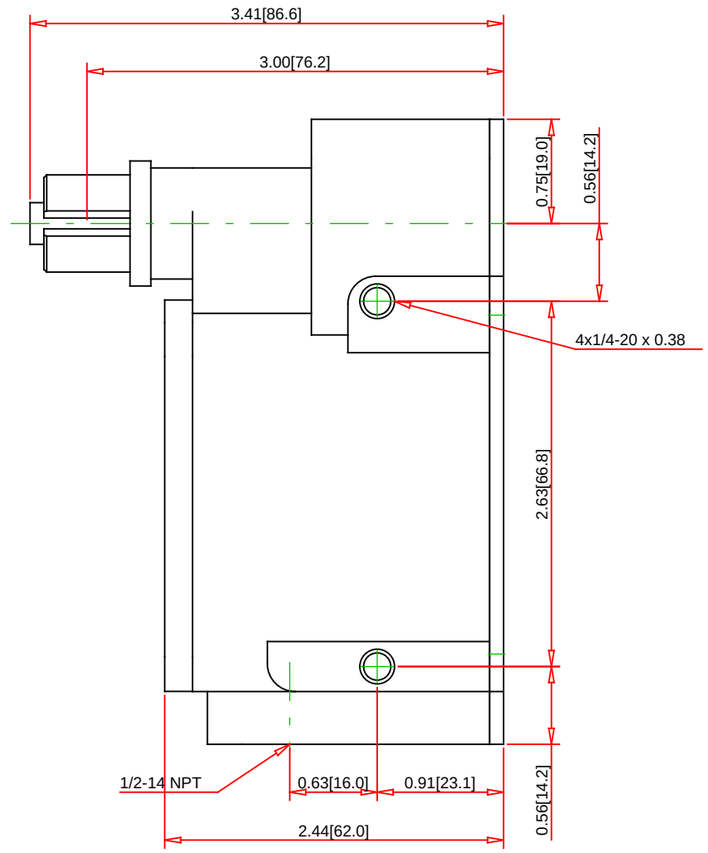

Note:
- Drawings Not To Scale
- Drawings Subject to Change Without Notice
- Dimensions are inches next to [Millimeters]

Part No.:

9007FTUC4

Telemecanique Sensors

Telemecanique Sensors
1875 Founders Drive
Dayton, OH 45420-4017
Customer Care Center : 1-800-435-2121
Web : www.tesensors.com

Technical Information:

Terminal Type:	Screw Clamp
Enclosure Rating:	NEMA 1/2/4/12/13/IP65/IP66/IP67
Approvals:	UL # Number E78403 CCN NKCR - CSA # LR25490 Class 3211-03 - CE
Weight:	2.57 lb. (1.17 kg)
Conforming to Standards:	NEMA A600 UL508
RoHS:	No
Operating Temperature Range:	-10 to 180° F
Shock Resistance:	30G
Vibration Resistance:	10G (10-150Hz)
Max. Actuation Speed :	
Repeat Accuracy:	±0.004 in (0.10 mm)
Operating Torque/Force:	12 in-Pounds
Cable Length:	

Specification:

Description:	9007FT, rotary, spring return CW & CCW neutral pos, seq 4, style C, 0.5" NPT
Body Style/Type Description:	NEMA Square D Limit Switches 9007 T/FT Severe Duty 59mm Metal Body
Head Type:	Rotary lever operated
Lever Arms:	Ordered separately
Body with Contact Type:	Sring return CW&CCW, Neutral Position, Sequence 4, Style C baseplate, 1/2-14 NPT
Conduit Thread:	1/2-14 NPT
Ampere Rating Continuous:	20A
Maximum Voltage Rating:	600V
Actuation:	CW and CCW
Actuator Action:	Spring Return (to Neutral)
Lever Arm Length:	
Roller Dimension:	
Roller Material:	
Contact Configuration:	2 N.O.
Contact Operation:	Snap Action
Connection Type:	Conduit Entrance (1/2-14 NPT)
Head Material:	Cast Zinc
Positive Opening:	No