Product data sheet

Specifications



Surge protection device, Surgelogic, 50kA, 208Y/120 VAC, 3 phase, 4 wire, NEMA 4X

SDSA2040

Product availability: Stock - Normally stocked in distribution facility

Main

Product	Surge protection device
Range	Surgelogic

Complementary

Voltage Rating	208Y/120 V AC
MCOV	180 V
SCCR	200 kA
Surge Current	50 kA
Nominal Discharge Current	10 kA
Number of Phases	3 phase
Wiring Configuration	4-wire
Connection	Wire AWG 12 copper
Local Signalling	Status LED normal operation
Cable length	24 in (609.6 mm)
Mounting Support	Panel mounting
Height	3.07 in (78 mm)
Width	3.6 in (92 mm)
Depth	2.6 in (67 mm)

Environment

Ambient Operating	149 °F (65 °C)
Enclosure Rating	NEMA 4X
Enclosure Material	Black Plastic
Standards	UL 1449:ed. 4 CSA C22.2 No 8:1986

Ordering and shipping details

Category	US1DE1B08462
Discount Schedule	DE1B
GTIN	785901602569
Returnability	Yes
Country of origin	MX

Price is “List Price” and may be subject to a trade discount – check with your local distributor or retailer for actual price.

Disclaimer: This documentation is not intended as a substitute for and is not to be used for determining suitability or reliability of these products for specific user applications

Packing Units

Unit Type of Package 1	PCE
Nbr. of units in pkg.	1
Package 1 Height	3.50 in (8.89 cm)
Package 1 Width	4.00 in (10.16 cm)
Package 1 Length	5.0 in (12.7 cm)
Package weight(Lbs)	15.680 oz (444.521 g)
Unit Type of Package 2	CAR
Number of Units in Package 2	20
Package 2 Height	6.00 in (15.24 cm)
Package 2 Width	16.50 in (41.91 cm)
Package 2 Length	17.00 in (43.18 cm)
Package 2 Weight	20.739 lb(US) (9.407 kg)

Contractual warranty

Warranty (in months)	18

Environmental Data

Schneider Electric aims to achieve Net Zero status by 2050 through supply chain partnerships, lower impact materials, and circularity via our ongoing “Use Better, Use Longer, Use Again” campaign to extend product lifetimes and recyclability.

Environmental Data explained >

How we assess product sustainability >

Use Better

Materials and Substances

Packaging made with recycled cardboard	No
Packaging without single use plastic	Yes
EU RoHS Directive	Compliant By Exemption
REACh Regulation	Reference contains Substances of Very High Concern above the threshold
California proposition 65	WARNING: This product can expose you to chemicals including: Lead and lead compounds, which is known to the State of California to cause cancer and birth defects or other reproductive harm. For more information go to www.P65Warnings.ca.gov

Use Longer

Lifetime extension

Repair	No

Use Again

Repack and remanufacture

Take-back	No
WEEE Label	The product must be disposed on European Union markets following specific waste collection and never end up in rubbish bins.

Technical Illustration

Dimensions

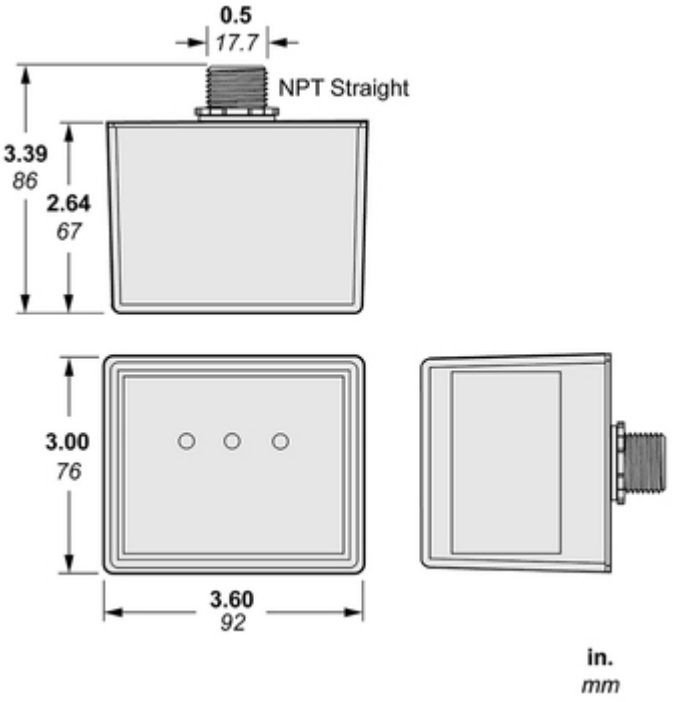

Technical Illustration

Wiring diagram

