Product data sheet

Specifications



Panelboard enclosure box, NQ/NF, Type 3R/5/12, 20in W x 44in H x 6.5in D

MH44WP

Product availability: Stock - Normally stocked in distribution facility

Main

Product	Enclosure

Complementary

Material	Steel
Height	44 in (1117.6 mm)
Width	20 in (508 mm)
Depth	6.5 in (165.1 mm)
Device mounting	Surface
Tightening torque	3 N.m

Environment

Enclosure Rating	NEMA 3R/12
Product Certifications	cULus

Ordering and shipping details

Category	US1PE1A00110
Discount Schedule	PE1A
GTIN	785901798088
Returnability	Yes
Country of origin	MX

Packing Units

Unit Type of Package 1	PCE
Nbr. of units in pkg.	1
Package 1 Height	7.000 in (17.780 cm)
Package 1 Width	21.300 in (54.102 cm)
Package 1 Length	45.500 in (115.570 cm)
Package weight(Lbs)	77.0009 lb(US) (34.927 kg)

Contractual warranty

Warranty (in months)	18

Price is “List Price” and may be subject to a trade discount – check with your local distributor or retailer for actual price.

Disclaimer: This documentation is not intended as a substitute for and is not to be used for determining suitability or reliability of these products for specific user applications

Environmental Data

Schneider Electric aims to achieve Net Zero status by 2050 through supply chain partnerships, lower impact materials, and circularity via our ongoing “Use Better, Use Longer, Use Again” campaign to extend product lifetimes and recyclability.

Environmental Data explained >

How we assess product sustainability >

Environmental footprint

Total lifecycle Carbon footprint	**317 kg CO2 eq.**
Carbon footprint of the manufacturing phase [A1 to A3]	**228 kg CO2 eq.**
Carbon footprint of the distribution phase [A4]	**10 kg CO2 eq.**
Carbon footprint of the installation phase [A5]	**0.4 kg CO2 eq.**
Carbon footprint of the use phase [B2, B3, B4, B6]	**0 kg CO2 eq.**
Carbon footprint of the end-of-life phase [C1 to C4]	**78 kg CO2 eq.**
Environmental Disclosure	**Product Environmental Profile**

Use Better

Materials and Substances

Packaging made with recycled cardboard	**No**
Packaging without single use plastic	**No**
EU RoHS Directive	**Compliant**
REACh Regulation	**Free of Substances of Very High Concern above the threshold**
California proposition 65	**WARNING: This product can expose you to chemicals including: Nickel compounds, which is known to the State of California to cause cancer, and Bisphenol A (BPA), which is known to the State of California to cause birth defects or other reproductive harm. For more information go to www.P65Warnings.ca.gov**

Use Longer

Lifetime extension

Repair	**No**

Use Again

Repack and remanufacture

Recyclability potential, in %	**97**
Circularity Profile	**No need of specific recycling operations**
Take-back	**No**
WEEE Label	**The product must be disposed on European Union markets following specific waste collection and never end up in rubbish bins.**

Dimensions Drawings

Approximate Dimensions

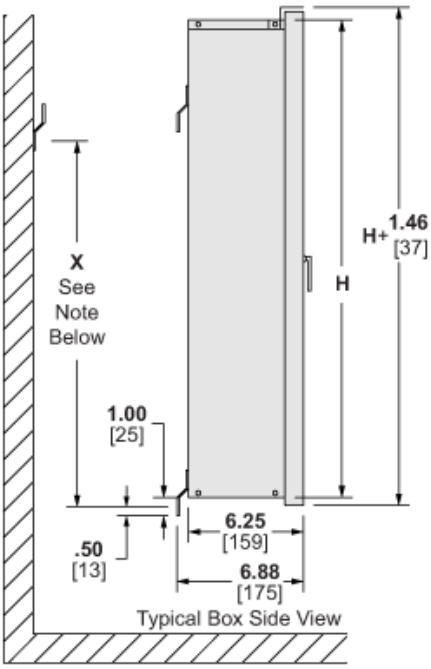

Typical Box Side View

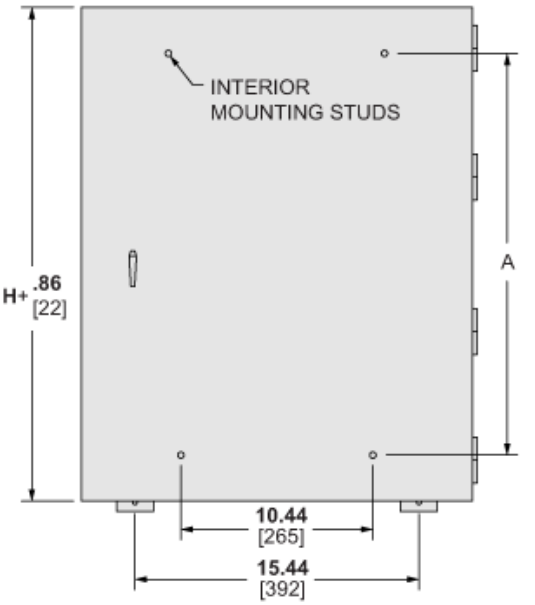

Typical Front View

in.
[mm]

CATALOG NUMBER	BOX HEIGHT H		MOUNTING INTERIOR HEIGHT A	
	IN	MM	IN	MM
MH26WP	26.00	660	21.00	533
MH32WP	32.00	813	27.00	686
MH38WP	38.00	965	33.00	838
MH44WP	44.00	1118	39.00	991
MH50WP	50.00	1270	45.00	1143
MH56WP	56.00	1422	51.00	1295
MH62WP	62.00	1575	57.00	1448
MH68WP	68.00	1727	63.00	1600
MH74WP	74.00	1880	69.00	1753
MH80WP	80.00	2032	75.00	1905
MH86WP	86.00	2184	81.00	2057

NOTE: FOR "X" DIMENSION,
SUBTRACT 6.60/[168] FROM THE BOX HEIGHT.

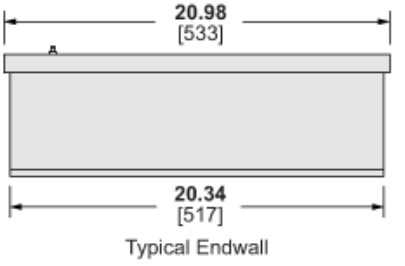

Typical Endwall

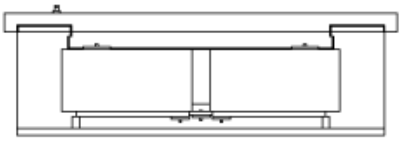

Typical Mounting of QO/QOB Circuit Breakers

Technical Illustration

Dimensions

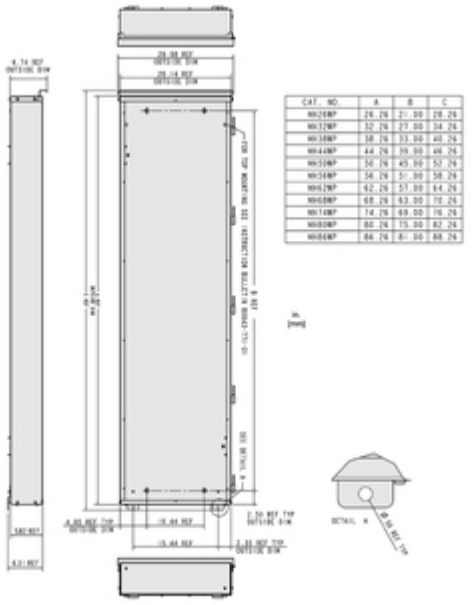

CAT. NO.	A	B	C
MH26WP	26.26	21.00	28.26
MH32WP	32.26	27.00	34.26
MH38WP	38.26	33.00	40.26
MH44WP	44.26	39.00	46.26
MH50WP	50.26	45.00	52.26
MH56WP	56.26	51.00	58.26
MH62WP	62.26	57.00	64.26
MH68WP	68.26	63.00	70.26
MH74WP	74.26	69.00	76.26
MH80WP	80.26	75.00	82.26
MH84WP	84.26	81.00	88.26