Product data sheet

Specifications



Mini circuit breaker, QO, 60A, 2 pole, 120/240VAC, 10kA, bolt on, 6mA grd fault A, pigtail [TAA]

QOB260GFI

Product availability: Stock - Normally stocked in distribution facility

Main

Product	Miniature circuit-breaker
Range	QO
Current Rating	60 A
Voltage Rating	120/240 V AC
Mounting Type	Bolt-on
Number of Poles	2P
Circuit Breaker Type	Ground fault protecting class A 6 mA
Ratings	Not rated
Electrical Connection	Pressure plate

Complementary

Interrupt Rating	10 kA 120/240 V AC
Number of Panel Spaces	2
Wire Size	AWG 12...AWG 4 aluminium AWG 14...AWG 6 copper
Tightening Torque	44.3 lbf.in (5 N.m) 40.7 lbf.in (4.6 N.m) 0.006…0.03 in² (4…20 mm²) (AWG 12...AWG 4)
Height	4.1 in (105 mm)
Width	1.5 in (38 mm)
Depth	2.9 in (74 mm)
Product Weight	0.981 lb(US) (0.445 kg)

Environment

Certifications	UL Listed CSA
Ambient Rating	104 °F (40 °C)

Ordering and shipping details

Category	US10DE200015
Discount Schedule	0DE2
GTIN	785901363002
Returnability	Yes
Country of origin	MX

Price is “List Price” and may be subject to a trade discount – check with your local distributor or retailer for actual price.

Disclaimer: This documentation is not intended as a substitute for and is not to be used for determining suitability or reliability of these products for specific user applications

Packing Units

Unit Type of Package 1	PCE
Nbr. of units in pkg.	1
Package 1 Height	2.200 in (5.588 cm)
Package 1 Width	3.500 in (8.890 cm)
Package 1 Length	5.300 in (13.462 cm)
Package weight(Lbs)	15.680 oz (444.520 g)

Compliance

Compliance	TAA Compliant

Contractual warranty

Warranty (in months)	18

Environmental Data

Schneider Electric aims to achieve Net Zero status by 2050 through supply chain partnerships, lower impact materials, and circularity via our ongoing “Use Better, Use Longer, Use Again” campaign to extend product lifetimes and recyclability.

Environmental Data explained >

How we assess product sustainability >

Environmental footprint

Total lifecycle Carbon footprint	**41 kg CO2 eq.**
Carbon footprint of the manufacturing phase [A1 to A3]	**3 kg CO2 eq.**
Carbon footprint of the distribution phase [A4]	**0.1 kg CO2 eq.**
Carbon footprint of the installation phase [A5]	**0 kg CO2 eq.**
Carbon footprint of the use phase [B2, B3, B4, B6]	**37 kg CO2 eq.**
Carbon footprint of the end-of-life phase [C1 to C4]	**0.1 kg CO2 eq.**
Environmental Disclosure	**Product Environmental Profile**

Use Better

Materials and Substances

Packaging made with recycled cardboard	**No**
Packaging without single use plastic	**Yes**
EU RoHS Directive	**Compliant By Exemption**
REACh Regulation	**Reference contains Substances of Very High Concern above the threshold**
California proposition 65	**WARNING: This product can expose you to chemicals including: DINP, which is known to the State of California to cause cancer, and DIDP, which is known to the State of California to cause birth defects or other reproductive harm. For more information go to www.P65Warnings.ca.gov**

Use Longer

Lifetime extension

Repair	**No**

Use Again

Repack and remanufacture

Recyclability potential, in %	**0**
Circularity Profile	**End of Life Information**
Take-back	**No**

Technical Illustration

Dimensions

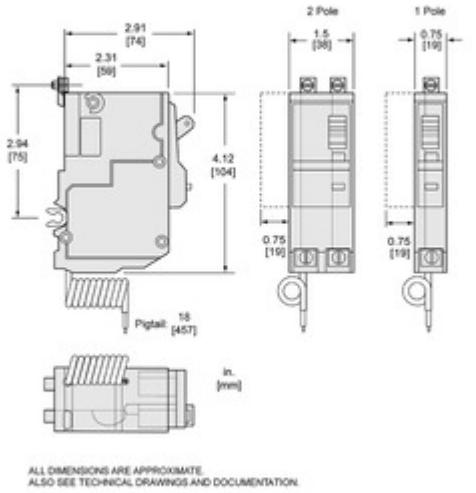

Technical Illustration

Wiring diagram

