Product data sheet

Specifications



Load center, QO, 1 phase, 8 spaces, 16 circuits, 100A fixed main lugs, NEMA1, surface cover

QO816L100S

Product availability: Stock - Normally stocked in distribution facility

Main

Marketing Trade Name	QO
Product Type	Load Center
Cover Type	Surface cover
Installation Orientation	Vertical

Complementary

Tightening Torque	Main lugs 50 lb.in, AWG 8, aluminium/copper Main lugs 50 lb.in, AWG 6...AWG 1/0, aluminium/copper
PoN Convertible Mains (lugs)	Fixed Mains (lugs)
Rated Current	100 A
Number of Spaces	8
Max Short Circuit Current Rating	10 kA
Maximum Number of Single Pole Circuits	16
Maximum Number of Tandem Breakers	8
Number of Phases	1 phase 3 wires
Voltage Rating	120/240 V AC
Wire Size	AWG 8...AWG 1 aluminium/copper
Ground Bar	Grounding bar (ordered separately)
Electrical Connection	Lugs
Busbar Material	Tin plated aluminium: busbar
Enclosure Material	Welded sheet steel
Surface Finish	Baked enamel Gray
Box Number	4
Height	12.6 in (319 mm)
Width	8.9 in (226 mm)
Product Weight	7.78 lb(US) (3.53 kg)

Environment

Enclosure Rating	NEMA 1 indoor enclosure
Ambient Air Temperature for Operation	23 °F (-5 °C) 104 °F (40 °C)
Product Certifications	UL Listed

Price is “List Price” and may be subject to a trade discount – check with your local distributor or retailer for actual price.

Disclaimer: This documentation is not intended as a substitute for and is not to be used for determining suitability or reliability of these products for specific user applications

Ordering and shipping details

Category	US1DE3A00101
Discount Schedule	DE3A
GTIN	785901785682
Returnability	Yes
Country of origin	MX

Packing Units

Unit Type of Package 1	PCE
Nbr. of units in pkg.	1
Package 1 Height	4.3 in (10.9 cm)
Package 1 Width	10.8 in (27.4 cm)
Package 1 Length	14.3 in (36.3 cm)
Package weight(Lbs)	7.78 lb(US) (3.53 kg)

Contractual warranty

Warranty (in months)	18

Environmental Data

Schneider Electric aims to achieve Net Zero status by 2050 through supply chain partnerships, lower impact materials, and circularity via our ongoing “Use Better, Use Longer, Use Again” campaign to extend product lifetimes and recyclability.

Environmental Data explained >

How we assess product sustainability >

Environmental footprint

Total lifecycle Carbon footprint	**19 kg CO2 eq.**
Carbon footprint of the manufacturing phase [A1 to A3]	**18 kg CO2 eq.**
Carbon footprint of the distribution phase [A4]	**1 kg CO2 eq.**
Carbon footprint of the installation phase [A5]	**0 kg CO2 eq.**
Carbon footprint of the use phase [B2, B3, B4, B6]	**0.1 kg CO2 eq.**
Carbon footprint of the end-of-life phase [C1 to C4]	**0.3 kg CO2 eq.**
Environmental Disclosure	**Product Environmental Profile**

Use Better

Materials and Substances

Packaging made with recycled cardboard	**No**
Packaging without single use plastic	**No**
EU RoHS Directive	**Compliant**
REACh Regulation	**Free of Substances of Very High Concern above the threshold**
California proposition 65	**WARNING: This product can expose you to chemicals including: Lead and lead compounds, which is known to the State of California to cause cancer and birth defects or other reproductive harm. For more information go to www.P65Warnings.ca.gov**

Use Longer

Lifetime extension

Repair	**No**

Use Again

Repack and remanufacture

Recyclability potential, in %	**89**
Circularity Profile	**No need of specific recycling operations**
Take-back	**No**
WEEE Label	**The product must be disposed on European Union markets following specific waste collection and never end up in rubbish bins.**

Technical Illustration

Dimensions

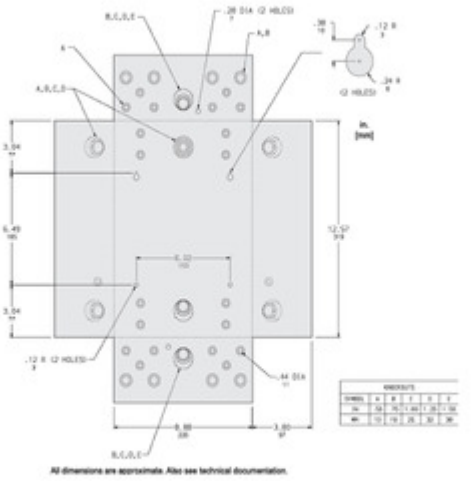

Technical Illustration

Wiring diagram

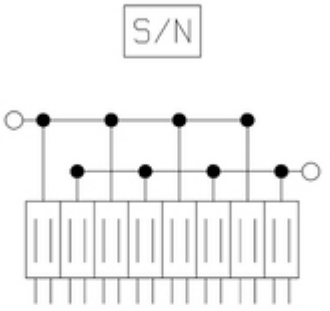

QO816L100F
QO816L100S
QO816L100DF
QO816L100DS
QO816L100DFCU
QO816L100DSCU

Image of product / Alternate images

Alternative





