| Panel Thickness E dim. inches (mm) | Number of Gasket |
|---|---|
| 1/16 (1.6) | 4 |
| 1/8 (3.2) | 3 |
| 3/16 (4.8) | 2 |
| 1/4 (6.4) | 1 |

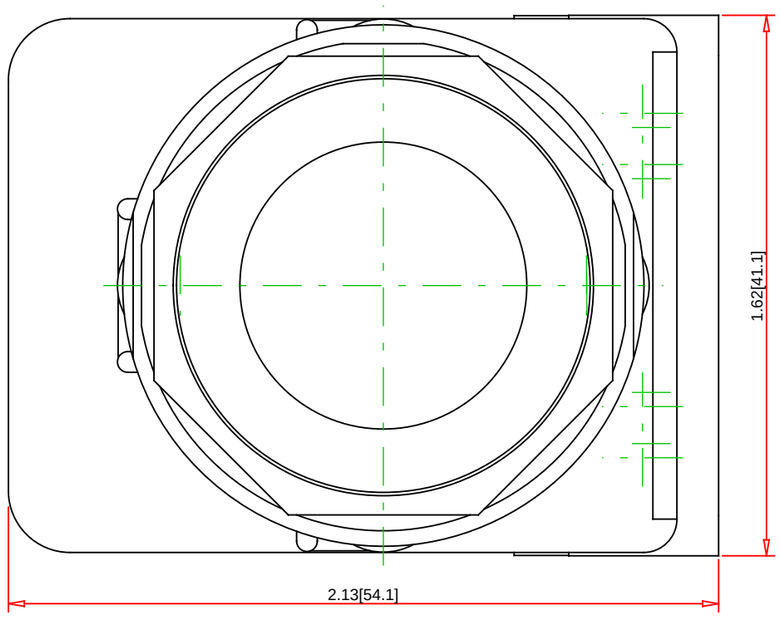


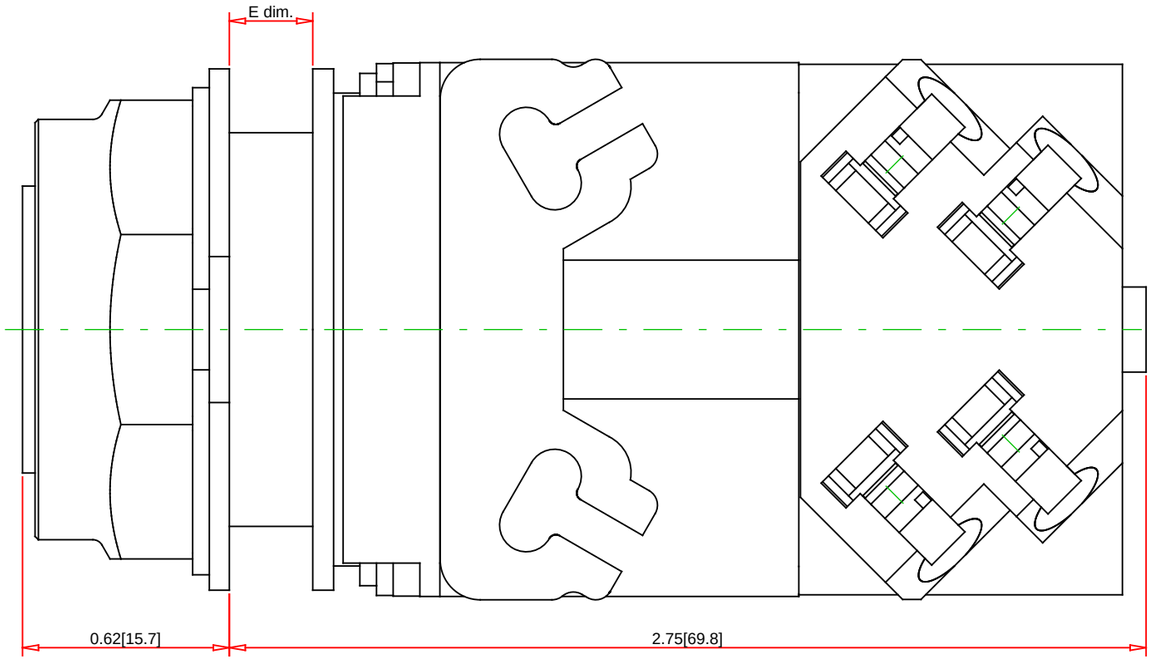


Note:
- Drawings Not To Scale
- Drawings Subject to Change Without Notice
- Dimensions are inches next to [Millimeters]

Part No.:

# 9001SKT35LY

Schneider Electric United States
North American Division
Boston One Campus
800 Federal Street
Andover, MA 01810, USA
Phone:+1 8773425173
Email: CCC@us.schneider-electric.com

## Technical Information:

| | |
|---|---|
| UL File: | E78403 CCN NKCR |
| CSA File: | LR24590 Class 3211-03 |
| CE Marked: | Yes |
| RoHS: | Yes |
| NEMA / IP Rating: | NEMA 1/2/3/3R/4/4X/6/12/13 Water tight, Dust tight, Oil tight and Corrosion Resistant (Indoor Use), IP66 |
| Key Number: | n/a |
| Key Removal: | n/a |
| Light Module Supply Voltage: | 24/28V |
| Light Module Type: | LED (Yellow) |
| Number of Operators: | n/a |

## Specification:

| | |
|---|---|
| Description: | 30mm Pilot Light |
| Ring Nut Material: | Black Plastic |
| Operator Type: | Push-To-Test |
| Operator Action: | n/a |
| Button Type: | n/a |
| Guard Type: | n/a |
| Button/Cap Color: | n/a |
| Lens Type: | No Lens |
| Lens Color: | No Lens |
| Knob Type: | not applicable |
| Knob Color: | n/a |
| Number of Positions: | n/a |