M-7503 | 5

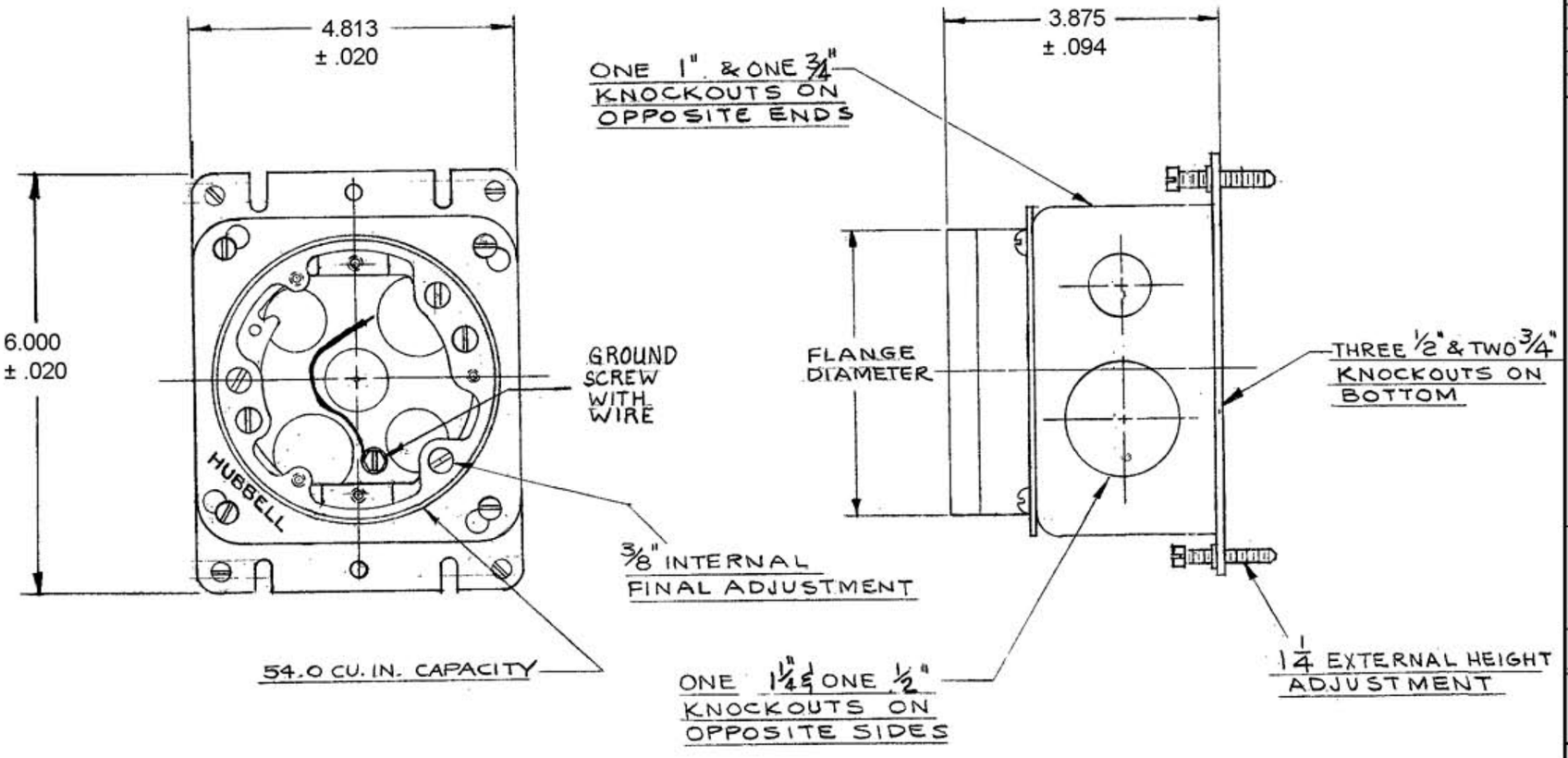


| CAT. NO. | FLANGE | FLANGE DIA. |
|---|---|---|
| B2527 | BRASS | 4 3/32 |
| BA2527 | ALUM. | 4 3/16 |

LIST OF PARTS

| DESCRIPTION | MATERIAL | FINISH |
|---|---|---|
| BOX | STEEL | GALVANIZED |
| | | |
| FLAT HEAD SCR. | STEEL | ZINC PL. |
| ROUND HEAD SCR. | STEEL | ZINC PL. |
| ADAPTER | STEEL | GALVANIZED |
| ADJUSTING COLLAR | STEEL | GALVANIZED |
| FLANGE | SEE TABLE | |
| ADJUSTING SCREW | STEEL | ZINC PL. |
| GROUND SCREW | STEEL | GREEN |
| GROUND WIRE | COPPER | GREEN INSULATION |

| SYM | REVISIONS | APP | DATE |
|---|---|---|---|
| 5 | CONVERTED DIMS TO 3 PL DECIMAL AND ADDED TOL, REMOVED "-" FROM CAT NO'S PER DCN #7794 AMZ | DB | 7-31-00 |
| 4 | ADDED GROUND SCREW - WITH WIRE DCN 7373 | DB | 1-17-00 SPN |
| 3 | CHANGED FINISH ON BOX, ADAPTER & ADJ. COLLAR FROM ZINC PL. TO GALVANIZED. ADDED FLANGE DIA. COLUMN TO TABLE | SGL | 1-23-90 AJL |
| 2 | BOX SHAPE CHANGED | SGL | 10-11-79 J.R. |
| | ADAPTER PL. REMOVED | | 10-11-79 J.R. |
| 1 | REVISED DWG & LIST OF PARTS | SGL | 5-2-78 ASM |

TITLE: DUALEVEL FLOOR BOX (DEEP)

TOLERANCES UNLESS OTHERWISE SPECIFIED
FRACTIONS ± 1/64
DECIMALS ± .005
ANGLES ± 2°

HARVEY HUBBELL, INC.
BRIDGEPORT, CONN.
DR. BY A.J.L. APP. BY
TR. BY SCALE 1/2 = 1"
CHK'D. BY S.G.L. DATE 6-5-72

CODE 74545

DIMENSION SHEET FOR CAT. NO. B2527 & BA2527

REPAIRABLE ☐ NON-REPAIRABLE ☒

B M-7503 5