Pro-face
by Schneider Electric

DATASHEET

5.7” GP4000H Series Graphical Pendant Station





5.7 inch TFT Color LCD
Fan-less, Diskless Quick Mount HMI

GP4000H

Model: PFXGP4311HTAD

24 Vdc
VGA
5.7 inch

Powered by: Screen Editor GP-Pro EX

c UL us LISTED

Features:

- Tethered HMIs with full graphic touch screen
- Built-in Safety Features: Emergency Stop, 3-Position Enable Switch, and Key Switch
- Ideal for use with portable machine operations and diagnostics
- Supports dual protocols, with the industry’s best serial and Ethernet protocol selection
- Applications include conveyor systems, overhead crane control and warehouse inventory control
- Extensive multi-language character support
- Connect directly to PLC or use easy disconnect access points

Specifications		
Model		GP-4311H
Display	Type	5.7” TFT Color LCD
	Resolution	640 x 480 Pixels (VGA)
	Dot Pitch	W0.18 x H0.18mm [W0.01 X H0.01in.]
	Effective Display Area	115.2 x 86.4mm (4.54 x 3.4in)
	Display Colors	65,536 Colors (No blink) / 16,384 Colors (Blink)
	Backlight	White LED (Not user replaceable. When replacement is required, contact your local distributor.)
	Brightness Control	16 Levels (Adjusted with touch panel)
	Language Fonts	Japanese: 6,962 (JIS Standards 1 & 2) (including 607 non-kanji characters), ANK: 158 (Korean fonts, Simplified Chinese and Traditional Chinese fonts are downloadable.
	Chracter Sizes	Standard Font: 8 x 8, 8 x 16, 16 x 16 and 32 x 32 Pixel Fonts, Stroke Font: 6 to 127 Pixel Fonts
	Font Sizes	Standard font: Width can be expanded up to 8 times., Height can be expanded up to 8 times.*1
	8 x 8 Dots	80 Char. x 60 Rows
	8 x 16 Dots	80 Char. x 30 Rows
	16 x 16 Dots	40 Char. x 30 Rows
	32 x 32 Dots	20 Char. x 15 Rows

*1 Other font sizes can be set up with the Editor software.

Specifications		
Memory	Application	Flash EPROM 32MB*2
	Data Backup	SRAM 320KB*2*3
Clock Accuracy		±65 sec./month (deviation at room temperature and power is OFF) *4
Interfaces	Serial (COM1)	Asynchronous Transmission: RS-232C/RS-422/RS-485, Data Length: 7 or 8 bits. Stop Bit: 1 or 2 bits. Parity: None, odd, or even, Data transmission speed: 2,400 to 115,200bps, 187,500bps (MPI) Maximum Communication Distance*5: When using RS-232C: 15m (49.2ft) When using RS-422 at 115,200bps : 1,200m (3937ft)
	Ethernet	IEEE802.3i/IEEE802.3u, 10BASE-T/100BASE-TX Connector: Modular Jack (RJ-45) x 1 Maximum Communication Distance*5: 100m (328.1ft)
	USB (Type-A)	Conforms to USB2.0 (TYPE-A) x 1, Power Supply Voltage: DC 5 V ±5 %, Output Current: 500mA or less, Communication Distance: 5m [16.4ft.] or less
	USB (Type mini-B)	Conforms to USB2.0 (mini-B) x 1, Communication Distance: 5m [16.4ft.] or less
	SD Card	SD Card Slot x 1
	Function Switch	12 Switches (Right: 6 Switches, Left: 6 Switches) (DOUT: 2 Open Collector Output [F1, F2], Operation Switch: 1 Open Collector Output [O.P])
	Emergency Switch Output	Push-lock Switch, 3 Contacts (A-contact: 1 Contact, B-contact: 2 Contacts), Rated Voltage: DC 30V, Maximum Rated Current: 1A, (Minimum Allowable Load: DC 5V, 1mA), Applicable Standards*6: IEC/EN60947-5-1, IEC/EN60947-5-5, UL508, CSA C22.2 No.14
	3-Position Enable Switch Output	GP Rear Panel Switch, 2 Contacts (A-contact), Rated Voltage: DC 30V, Maximum Rated Current: 700mA (Minimum Allowable Load: DC 3V, 5mA), Applicable Standards*6: IEC/EN60947-5-8, 60204-1, UL508, CSA C22.2 No.14, ISO12100/EN12100-1,2, ISO11161/prEN11161 ISO10218/EN775, ANSI/RIA R15.06, ANSI B11.19
	Key Switch Output	1c-Contact, Rated Voltage: DC 24V, Maximum Rated Current: 300mA
	Operation	Open Collector Output: 1 Point, Rated Voltage: DC 24V, Maximum Rated Current: 300mA
	External Buzzer Output	Open Collector Output 1 Point, Rated Voltage: DC 24V, Maximum Rated Current: 300mA
	DOUT Output	Open Collector Output: 2 Points [F1, F2], Rated Voltage: DC 24V, Maximum Rated Current: 300mA/point

*2 Amount of memory you can use differs depending on your screen editing software. Refer to the manual for your screen editing software. *3 Rechargeable lithium battery for backup memory. *4 Depending on the operating temperature and age of unit, the clock can deviate from -380 to +90 sec./month. For systems where this level of deviation is a problem, the user should monitor and make adjustments when required. *5 When using the Conversion Adapter (model number: AGP3000H-ADPCOM-01), the distance includes the cable length between this product and the Conversion Adapter.

©2016 Pro-face. All rights reserved. Specifications may change without notice.

Pro-face
by Schneider Electric

DATASHEET

General Specifications

Model		GP-4311H
Electrical	Input Voltage	24V DC
	Raded Voltage limits	DC 19.2 to 28.8Vdc
	Allowable Voltage Drop	10ms or less
	In-Rush Current	35A or less
	Voltage Endurance	500Vac, 20mA for 1 minute (between charging and FG terminals)
	Insulation Resistance	500Vdc, 10MΩ or more (between charging and FG terminals)
	Power Consumption	12W or less (When power is not supplied to external devices: 8W or less)
Environmental	Surrounding Air Temp	0 to 40°C (32 to 104°F)
	Storage Temperature	-20 to 60°C (-4 to 140°F)
	Ambient Humidity	10% to 90% RH (Non Condensing, Wet Bulb Temperature 39°C [102.2°F] or less)
	Storage Humidity	10 to 90% RH (Wet Bulb Temperature: 39°C max. - No condensation.)
	Dust	0.1 mg/m3 (10-7 oz/ft3) or less (Non-conductive Levels)
	Pollution Degree	For use in pollution degree 2 environment
Structural	Certifications	UL61010-2-201, CE(EMC, LVD, Machine), KC, EAC, RCM
	Noise Immunity	Noise Voltage: 1,000Vp-p Pulse Duration: 1ms, Rise Time: 1ns (via noise simulator)
	Electrostatic Discharge Immunity	Contact Discharge Method: 6kV (IEC/EN 61000-4-2 Level 3)
	External Dimensions (Front Module)	W 163mm [6.41in] x H 129.4mm [5.09in] x D 17.5mm [0.69in] (Depth refers to bezel only)
	Grounding	Functional Grounding: Grounding resistance of 100Ω, 2mm2 (AWG 14) or thicker wire, or your country's applicable standard (same for FG and SG terminals).
	Cooling Method	Natural Air Circulation
	Structure *8	Equivalent to IP65
	Weight	910g (2.01lb) or less: without a key switch, unit only 960g (2.12lb) or less: with a key switch, unit only
	Warranty	Two year standard
Software Required		GP-Pro EX v. 4.06.100 or later

*8 This product has been tested using conditions equivalent to the standards shown in the specification.

External Dimensions

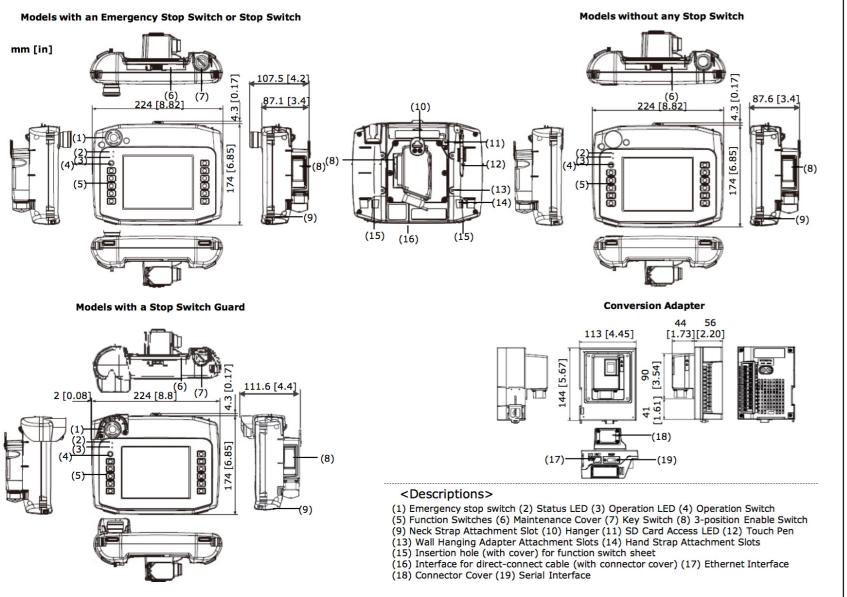

Ordering Information

Part Number	Description
PFXGP4311HTAD	Without any stop switch and key switch
PFXGP4311HTADER	With emergency stop switch (red), without key switch
PFXGP4311HTADERK	With emergency stop switch (red) and key switch
PFXGP4311HTADEYK	With stop switch (yellow) and key switch
PFXGP4311HTADEGK	With stop switch (gray) and key switch
AGP3000H-ADPCOM-01	Quick Disconnect Adapter
GP3000H-DFS6-01	Protective Sheets (Hard, Qty. 5)
GP3000H-WMA-01	Wall / VESA Mount
GP3000H-DUPS-01	Function Key Labels (Replacement, Qty. 5)
GP3000H-EMGD-01	E-Stop Guard (Replacement)
CA7-TPPEN/ALL-01	Stylus (Replacement)
GP3000H-HS-01	Hand Strap (Replacement)
GP3000H-CBLS-3M GP3000H-CBLS-5M GP3000H-CBLS-10M	AGP to Flying Leads Cable - Standard (Soft)
GP3000H-CBLH-10M	AGP to Flying Leads Cable - Standard (Hard)
GP3000H-CBLSD-3M GP3000H-CBLSD-5M GP3000H-CBLSD-10M	AGP to ADPCOM Cable - Standard (Soft)
GP3000H-CBLHD-10M	AGP to ADPCOM Cable - Standard (Hard)

Pro-face America | 1050 Highland Dr., Suite D, Ann Arbor, MI 48108 | 800-289-9266 (p) | 734-864-7347 (f) | profaceamerica.com

©2016 Pro-face. All rights reserved. Specifications may change without notice.

California Proposition 65 Warning—Lead and Lead Compounds
Advertencia de la Proposición 65 de California—Plomo y compuestos de plomo
Avertissement concernant la Proposition 65 de Californie—Plomb et composés de plomb

⚠ **WARNING:** This product can expose you to chemicals including lead and lead compounds, which are known to the State of California to cause cancer and birth defects or other reproductive harm. For more information go to: www.P65Warnings.ca.gov.

⚠ **ADVERTENCIA**: Este producto puede exponerle a químicos incluyendo plomo y compuestos de plomo, que es (son) conocido(s) por el Estado de California como causante(s) de cáncer y defectos de nacimiento u otros daños reproductivos. Para mayor información, visite : www.P65Warnings.ca.gov.

⚠ **AVERTISSEMENT**: Ce produit peut vous exposer à des agents chimiques, y compris plomb et composés de plomb, identifiés par l'État de Californie comme pouvant causer le cancer et des malformations congénitales ou autres troubles de l'appareil reproducteur. Pour de plus amples informations, prière de consulter: www.P65Warnings.ca.gov.

All trademarks are the property of Schneider Electric SE, its subsidiaries, and affiliated companies.

Schneider Electric USA, Inc.
800 Federal Street
Andover, MA 01810 USA
888-778-2733
www.schneider-electric.us

Todas las marcas comerciales son propiedad de Schneider Electric SE, sus filiales y compañías afiliadas.

Importado en México por:
Schneider Electric México, S.A. de C.V.
Av. Ejercito Nacional No. 904
Col. Palmas, Polanco 11560 México, D.F.
55-5804-5000
www.schneider-electric.com.mx

Toutes les marques commerciales sont la propriété de Schneider Electric SE, ses filiales et compagnies affiliées.

Schneider Electric Canada, Inc.
5985 McLaughlin Road
Mississauga, ON L5R 1B8 Canada
800-565-6699
www.schneider-electric.ca

© 2018 Schneider Electric All Rights Reserved / Reservados todos los derechos / Tous droits réservés