Product data sheet

Specifications



Meter mains, Homeline, CSED, ringless socket, 200A, surface mount, maximum 8 spaces, 16 circuits, horn bypass

RC816F200CH

Product availability: Stock - Normally stocked in distribution facility

Main

Product or Component Type	Meter Mains
Range of Product	Homeline

Complementary

Line Rated Current	200 A
Short-circuit current	22 kA
Network number of phases	1
Meter socket type	Ringless
Mounting	Surface
Number of spaces	8
Number of circuits	16
Number of Tandem Breakers	8
Hub type	A
Electrical connection	Lugs, line side Feed-thru lugs, service ground
Wire Size	AWG 6...350 kcmil aluminium/copper)line side AWG 12...AWG 2/0 aluminium/copper)service ground
Tightening torque	Main lugs 250 lb.in, AWG 6...350 kcmil, aluminium/copper Service ground 50 lb.in, AWG 14...AWG 2/0, copper Service ground 50 lb.in, AWG 12...AWG 2/0, aluminium Branch lugs 35 lb.in, AWG 6...AWG 4, aluminium/copper Branch lugs 25 lb.in, AWG 8, aluminium/copper Branch lugs 20 lb.in, AWG 14...AWG 10, copper Branch lugs 20 lb.in, AWG 12...AWG 10, aluminium Cover 10 lb.in
Disconnect	Service disconnect (ordered separately)
Main Breaker Rating	200 A
Branch Breaker Rating	200 A
Service feed location	OH UG
Bypass type	Horn bypass
Height	35.13 in (892.30 mm)
Width	14.37 in (365.00 mm)
Depth	5.07 in (128.78 mm)
Bus Rating	200.0 A

Price is “List Price” and may be subject to a trade discount – check with your local distributor or retailer for actual price.

Disclaimer: This documentation is not intended as a substitute for and is not to be used for determining suitability or reliability of these products for specific user applications

Environment

Product certifications	UL E-6294

Ordering and shipping details

Category	US1DE3A00048
Discount Schedule	DE3A
GTIN	785901863960
Returnability	Yes
Country of origin	MX

Packing Units

Unit Type of Package 1	PCE
Nbr. of units in pkg.	1
Package 1 Height	5.800 in (14.732 cm)
Package 1 Width	14.900 in (37.846 cm)
Package 1 Length	36.600 in (92.964 cm)
Package weight(Lbs)	40.629 lb(US) (18.429 kg)
Unit Type of Package 2	PAL
Number of Units in Package 2	21
Package 2 Height	44.000 in (111.760 cm)
Package 2 Width	40.000 in (101.600 cm)
Package 2 Length	48.000 in (121.920 cm)
Package 2 Weight	885.0002 lb(US) (401.429 kg)

Contractual warranty

Warranty (in months)	18

Environmental Data

Schneider Electric aims to achieve Net Zero status by 2050 through supply chain partnerships, lower impact materials, and circularity via our ongoing “Use Better, Use Longer, Use Again” campaign to extend product lifetimes and recyclability.

Environmental Data explained >

How we assess product sustainability >

Environmental footprint

Total lifecycle Carbon footprint	**182 kg CO2 eq.**
Carbon footprint of the manufacturing phase [A1 to A3]	**119 kg CO2 eq.**
Carbon footprint of the distribution phase [A4]	**13 kg CO2 eq.**
Carbon footprint of the installation phase [A5]	**0.2 kg CO2 eq.**
Carbon footprint of the use phase [B2, B3, B4, B6]	**20 kg CO2 eq.**
Carbon footprint of the end-of-life phase [C1 to C4]	**30 kg CO2 eq.**
Environmental Disclosure	Product Environmental Profile

Use Better

Materials and Substances

Packaging made with recycled cardboard	**No**
Packaging without single use plastic	**No**
EU RoHS Directive	Compliant By Exemption
REACh Regulation	Reference contains Substances of Very High Concern above the threshold
California proposition 65	**WARNING: This product can expose you to chemicals including: Lead and lead compounds, which is known to the State of California to cause cancer and birth defects or other reproductive harm. For more information go to www.P65Warnings.ca.gov**

Use Longer

Lifetime extension

Repair	**No**

Use Again

Repack and remanufacture

Recyclability potential, in %	**89**
Circularity Profile	**No need of specific recycling operations**
Take-back	**No**

Technical Illustration

Dimensions

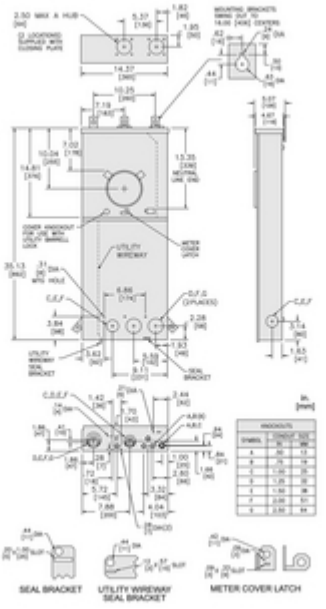

Technical Illustration

Wiring diagram

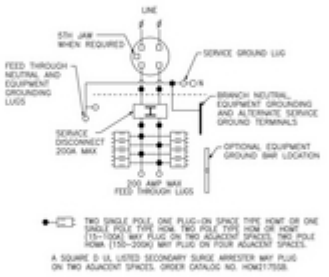

Image of product / Alternate images

Alternative



