Product data sheet

Specifications



Transformer, Type T, industrial control, 350VA, 1 phase, 240/416/480/600V primary, 99/120/130V secondary, 80C rise

9070T350D50

Product availability: Stock - Normally stocked in distribution facility

Main

Product Type	Industrial Control Transformer
Type	T

Complementary

Number of Phases	1 phase
Power Rating	350 VA UL 350 VA CSA 350 VA NOM 250 VA CE
Primary to Secondary Voltage	240/416/480/600 V 99/120/130 V 230/400/460/575 V 95/115/125 V 220/380/440/550 V 90/110/120 V 208/360/416/520 V 85/100/110 V
Temperature Rise	80 °C
Electrical Connection	Screw clamp terminals
Height	4.51 in (114.55 mm)
Width	5.25 in (133.35 mm)
Depth	5.61 in (142.49 mm)
Material	Copper: winding
Fingersafe Cover Compatibility	FSC23

Environment

Certifications	UL listed file E61239 CSA file LR37055 guide 184-N-90
Enclosure Type	Not rated (open device)
Insulation Temperature	266 °F (130 °C)

Ordering and shipping details

Category	US10CP816206
Discount Schedule	0CP8
GTIN	785901327288
Returnability	Yes
Country of origin	US

Packing Units

Price is “List Price” and may be subject to a trade discount – check with your local distributor or retailer for actual price.

Disclaimer: This documentation is not intended as a substitute for and is not to be used for determining suitability or reliability of these products for specific user applications

Unit Type of Package 1	PCE
Nbr. of units in pkg.	1
Package 1 Height	6.900 in (17.526 cm)
Package 1 Width	8.200 in (20.828 cm)
Package 1 Length	8.700 in (22.098 cm)
Package weight(Lbs)	16.901 lb(US) (7.666 kg)
Unit Type of Package 2	PAL
Number of Units in Package 2	80
Package 2 Height	40.0 in (101.6 cm)
Package 2 Width	40.0 in (101.6 cm)
Package 2 Length	48.00 in (121.92 cm)
Package 2 Weight	1421.28 lb(US) (644.68 kg)

Contractual warranty

Warranty (in months)	18

Environmental Data

Schneider Electric aims to achieve Net Zero status by 2050 through supply chain partnerships, lower impact materials, and circularity via our ongoing “Use Better, Use Longer, Use Again” campaign to extend product lifetimes and recyclability.

Environmental Data explained >

How we assess product sustainability >

Use Better

Materials and Substances

Packaging made with recycled cardboard	**Yes**
Packaging without single use plastic	**No**
SCIP Number	**Cc71a744-5621-4411-9c01-0b5589085e26**
EU RoHS Directive	**Compliant By Exemption**
REACh Regulation	**Reference contains Substances of Very High Concern above the threshold**
California proposition 65	**WARNING: This product can expose you to chemicals including: Phenyl glycidyl ether, which is known to the State of California to cause cancer and birth defects or other reproductive harm. For more information go to www.P65Warnings.ca.gov**
PVC free	**Yes**

Use Longer

Lifetime extension

Repair	**No**

Use Again

Repack and remanufacture

Take-back	**No**

Technical Illustration

Dimensions

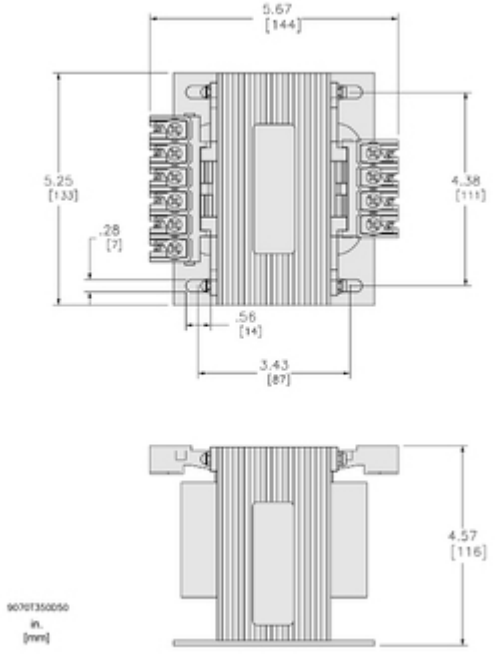

Technical Illustration

Wiring diagram

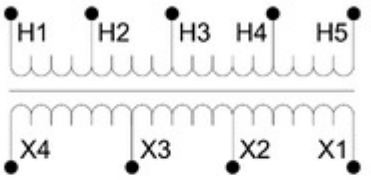

Options

Voltage Code	Voltages		Connections	
	Primary	Secondary	Primary	Secondary
D50	208/364/420/500 220/380/440/550 230/400/460/575 240/416/480/600	85/100/110 91/110/120 95/115/125 99/120/130	208 or 220 or 230 or 240: Connect to H1 and H2 364 or 380 or 400 or 416: Connect to H1 and H3 420 or 440 or 460 or 480: Connect to H1 and H4 500 or 550 or 575 or 600: Connect to H1 and H5	85 or 91 or 95 or 99: Connect to X1 and X2 100 or 110 or 115 or 120: Connect to X1 and X3 110 or 120 or 125 or 130: Connect to X1 and X4

REFER TO TECHNICAL DOCUMENTATION FOR COMPLETE INFORMATION.