Product data sheet

Specifications



Light block, Harmony 9001K, Harmony 9001SK, 30mm, incandescent bulb, 24...28V

9001KM35

Product availability: Stock - Normally stocked in distribution facility

Main

Range of Product	Harmony 9001K Harmony 9001SK
Product or Component Type	Light block
Device short name	9001K
Bulb base	BA 9s
Light block supply	Direct via integral resistance

Complementary

Product Weight	0.11 lb(US) (0.05 kg)
Light source	Incandescent bulb
[Us] rated supply voltage	24 V AC/DC
[Us] rated supply voltage	24...28 V
Light block supply	Full voltage
Size	30 mm

Environment

Protective treatment	TC
Ambient Air Temperature for Storage	-40…158 °F (-40…70 °C)
Ambient Air Temperature for Operation	-13…158 °F (-25…70 °C)
IP degree of protection	IP10 IEC 60529
Standards	IEC 60947-5-4 JIS C 852 UL 508 IEC 60947-1 CSA C22.2 No 14 JIS C 4520 IEC 60947-5-1
Product Certifications	NEMA UL 508
Electrical shock protection class	Class II conforming to IEC 61140
Vibration resistance	7 gn (f= 2…500 Hz) conforming to IEC 60068-2-6
Shock resistance	50 gn IEC 60068-2-27

Ordering and shipping details

Category	US10CS121435
Discount Schedule	0CS1

Price is “List Price” and may be subject to a trade discount – check with your local distributor or retailer for actual price.

Disclaimer: This documentation is not intended as a substitute for and is not to be used for determining suitability or reliability of these products for specific user applications

GTIN	785901726524
Returnability	Yes
Country of origin	MX

Packing Units

Unit Type of Package 1	PCE
Nbr. of units in pkg.	1
Package 1 Height	2.200 in (5.588 cm)
Package 1 Width	3.600 in (9.144 cm)
Package 1 Length	1.900 in (4.826 cm)
Package weight(Lbs)	2.240 oz (63.503 g)

Contractual warranty

Warranty (in months)	18

Environmental Data

Schneider Electric aims to achieve Net Zero status by 2050 through supply chain partnerships, lower impact materials, and circularity via our ongoing “Use Better, Use Longer, Use Again” campaign to extend product lifetimes and recyclability.

Environmental Data explained >

How we assess product sustainability >

Environmental footprint

Total lifecycle Carbon footprint	**0.5 kg CO2 eq.**
Carbon footprint of the manufacturing phase [A1 to A3]	**0.3 kg CO2 eq.**
Carbon footprint of the distribution phase [A4]	**0 kg CO2 eq.**
Carbon footprint of the installation phase [A5]	**0 kg CO2 eq.**
Carbon footprint of the use phase [B2, B3, B4, B6]	**0 kg CO2 eq.**
Carbon footprint of the end-of-life phase [C1 to C4]	**0.1 kg CO2 eq.**
Environmental Disclosure	Product Environmental Profile

Use Better

Materials and Substances

Packaging made with recycled cardboard	**Yes**
Packaging without single use plastic	**Yes**
SCIP Number	**Ae0c4eb9-0bfb-40a4-851f-5c619fbe777d**
EU RoHS Directive	Compliant By Exemption
REACh Regulation	Reference contains Substances of Very High Concern above the threshold
California proposition 65	**WARNING: This product can expose you to chemicals including: Lead and lead compounds, which is known to the State of California to cause cancer and birth defects or other reproductive harm. For more information go to www.P65Warnings.ca.gov**

Use Longer

Lifetime extension

Repair	**No**

Use Again

Repack and remanufacture

Recyclability potential, in %	**49**
Circularity Profile	End of Life Information
Take-back	**No**
WEEE Label	**The product must be disposed on European Union markets following specific waste collection and never end up in rubbish bins.**

Dimensions Drawings

Dimensions

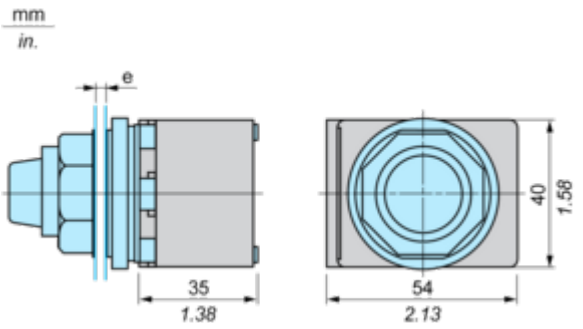

e panel thickness: 1 to 6 mm / 0.04 to 0.24 in.

Offer Marketing Illustration

Product benefits / Features



Offer Marketing Illustration

Product benefits / Features

