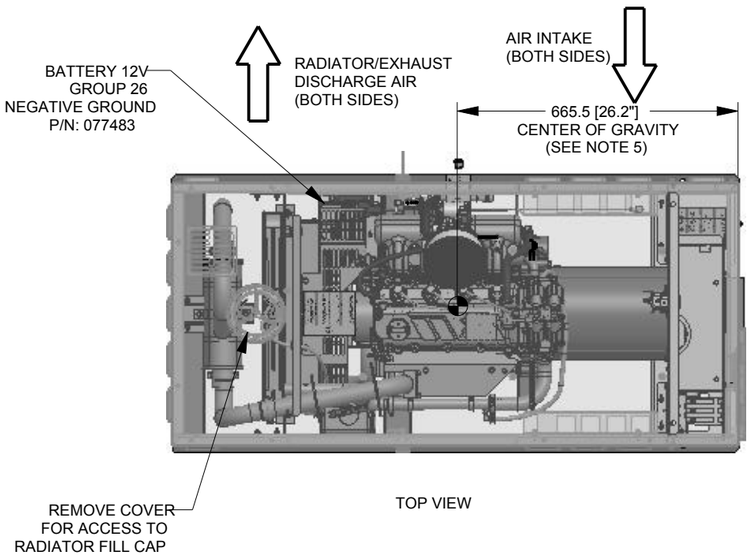

TOP VIEW

SERVICE ITEM	1.5L
OIL FILL CAP	EITHER DOOR
OIL DIP STICK	RIGHT DOOR
OIL FILTER	RIGHT DOOR
OIL DRAIN HOSE	RIGHT DOOR
RADIATOR DRAIN HOSE	RIGHT DOOR
AIR CLEANER ELEMENT	RIGHT DOOR
SPARK PLUGS	RIGHT DOOR
MUFFLER	SEE NOTE 12
FAN BELT	EITHER DOOR
BATTERY	RIGHT DOOR

REFERENCE OWNERS MANUAL
FOR PERIODIC
REPLACEMENT PART LISTINGS.

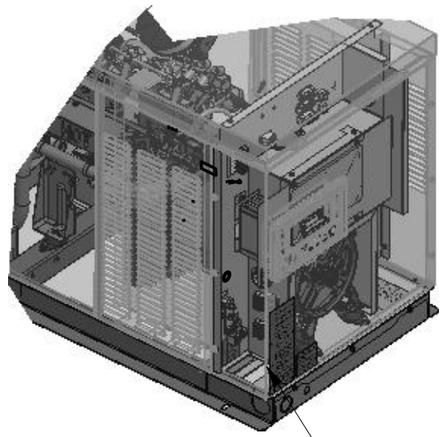

NOTES:

1. MINIMUM RECOMMENDED CONCRETE PAD SIZE IS 6" OFFSET OF OVERALL LENGTH AND WIDTH OF GENERATOR. {1082.1 (42.6") WIDE X 1884.7 (74.2") LONG}. REFERENCE INSTALLATION GUIDE SUPPLIED WITH THE UNIT FOR CONCRETE PAD GUIDELINES. REFERENCE MANUFACTURER'S SPECIFICATIONS IF USING ENGINEERED, PREFABRICATED SLABS.
2. ALLOW SUFFICIENT ROOM ON ALL SIDES OF THE GENERATOR FOR MAINTENANCE AND SERVICING. THIS UNIT MUST BE INSTALLED IN ACCORDANCE WITH CURRENT APPLICABLE NFPA 37 AND NFPA 70 STANDARDS AS WELL AS ANY OTHER FEDERAL, STATE, AND LOCAL CODES.
3. CONTROL PANEL / CIRCUIT BREAKER INFORMATION:
   - SEE SPECIFICATION SHEET OR OWNERS MANUAL
   - ACCESSIBLE THROUGH CUSTOMER ACCESS ASSEMBLY DOOR ON REAR OF GENERATOR.
4. REMOVE THE REAR ENCLOSURE COVER PANEL TO ACCESS THE STUB-UP AREAS AS FOLLOWS:
   - HIGH VOLTAGE CONNECTION INCLUDING AC LOAD LEAD CONDUIT CONNECTION NEUTRAL CONNECTION, BATTERY CHARGER 120 VOLT AC (0.5 AMP MAX) CONNECTION.
   - LOW VOLTAGE CONNECTION INCLUDING TRANSFER SWITCH CONTROL WIRES.
5. CENTER OF GRAVITY AND WEIGHT MAY CHANGE DUE TO UNIT OPTIONS.
6. BOTTOM OF GENERATOR SET MUST BE ENCLOSED TO PREVENT PEST INTRUSION AND RECIRCULATION OF DISCHARGE AIR AND/OR IMPROPER COOLING AIR FLOW.
7. EXHAUST SYSTEM MAXIMUM BACK PRESSURE: 24 INCHES H2O.
8. REFERENCE OWNERS MANUAL FOR LIFTING WARNINGS.
9. MOUNTING BOLTS OR STUDS TO MOUNTING SURFACE SHALL BE 5/8-11 GRADE 5 (USE STANDARD SAE TORQUE SPECS)
10. MUST ALLOW FREE FLOW OF INTAKE AIR, DISCHARGE AIR AND EXHAUST. SEE SPEC SHEET FOR MINIMUM AIR FLOW AND MAXIMUM RESTRICTION REQUIREMENTS.
11. GENERATOR MUST BE INSTALLED SUCH THAT FRESH COOLING AIR IS AVAILABLE AND THAT DISCHARGE AIR FROM RADIATOR IS NOT RECIRCULATED.
12. EXHAUST MUFFLER ENCLOSED WITHIN GENERATOR ENCLOSURE, REMOVE ENCLOSURE TO ACCESS EXHAUST MUFFLER.

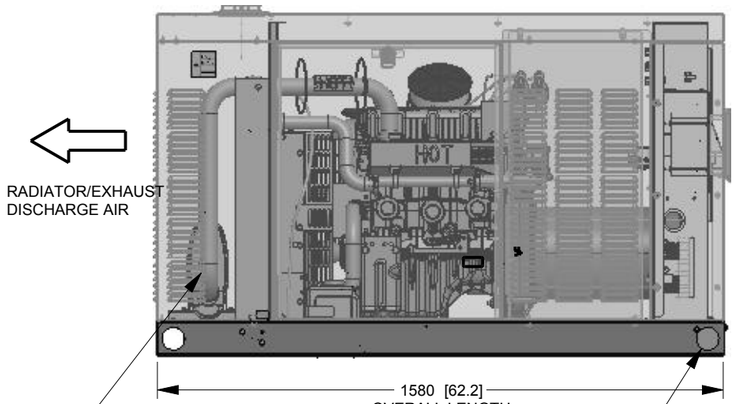

LEFT SIDE VIEW

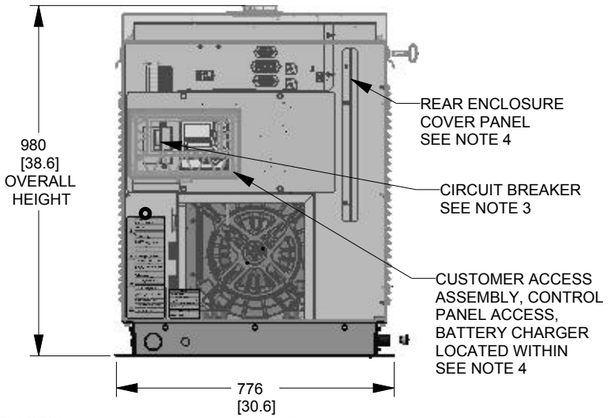

REAR VIEW

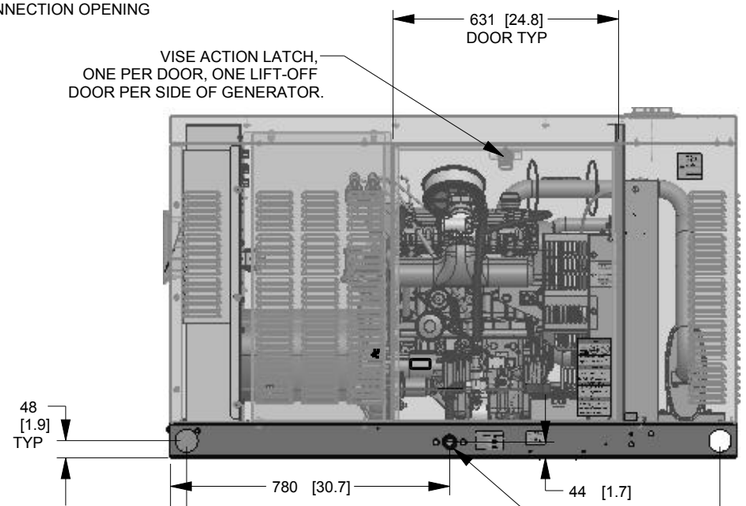

RIGHT SIDE VIEW

WEIGHT DATA				
ENGINE/KW	ENCLOSURE MATERIAL	WEIGHT GENSET ONLY KG [LBS]	WEIGHT SHIPPING SKID KG [LBS]	SHIPPING WEIGHT KG [LBS]
1.5L/25KW	ST	392 [865]	30 [66]	422 [931]
1.5L/30KW	ST	406 [895]	30 [66]	436 [961]
1.5L/25KW	AL	352 [777]	30 [66]	382 [843]
1.5L/30KW	AL	366 [807]	30 [66]	396 [873]

DRAWING CREATED FROM PRO/ENGINEER 3D FILE. ECO MODIFICATION TO BE APPLIED TO SOLID MODEL ONLY.

INSTALLATION DRAWING

GENERAC POWER SYSTEMS OWNS THE COPYRIGHT OF THIS DRAWING WHICH IS SUPPLIED IN CONFIDENCE AND MUST NOT BE USED FOR ANY PURPOSE OTHER THAN FOR WHICH IT IS SUPPLIED WITHOUT THE EXPRESS WRITTEN CONSENT OF GENERAC POWER SYSTEMS.
©GENERAC POWER SYSTEMS 2013

ELECTRONICALLY APPROVED
INSIDE WINDCHILL

GENERAC

TITLE
INSTALL PROTECTOR GAS (RG) 1.5L C1

ISSUE DATE: 02/03/15

SIZE	CAGE NO	DWG NO	REV
B	N/A	0K8420	E

SCALE 0.060 | WT-KG SEE ABOVE | SHEET 1 of 2

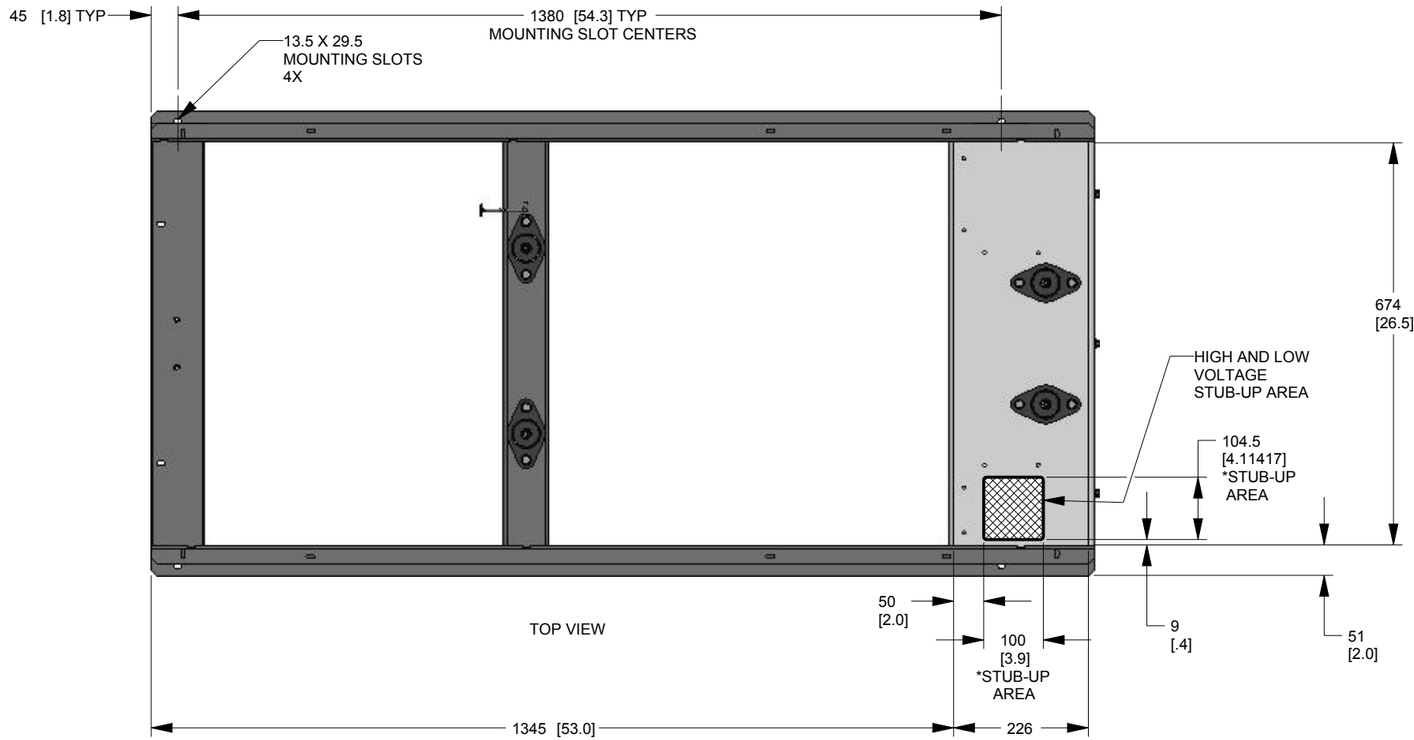

TOP VIEW

* NOTE - STUB-UP AREA FOR HIGH AND LOW VOLTAGE CONNECTIONS. CIRCUIT BREAKER, NEUTRAL AND CUSTOMER CONNECTION OPENING.

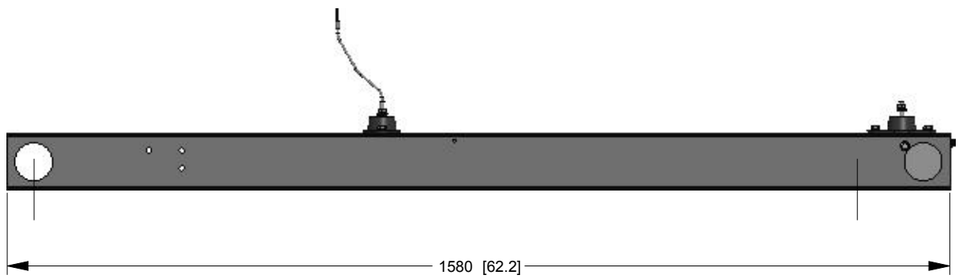

LEFT SIDE VIEW

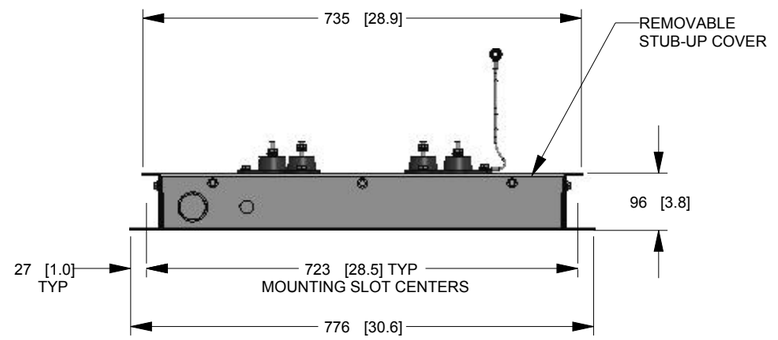

REAR VIEW

DRAWING CREATED FROM PRO/ENGINEER 3D FILE. ECO MODIFICATION TO BE APPLIED TO SOLID MODEL ONLY.

INSTALLATION DRAWING

GENERAC POWER SYSTEMS OWNS THE COPYRIGHT OF THIS DRAWING WHICH IS SUPPLIED IN CONFIDENCE AND MUST NOT BE USED FOR ANY PURPOSE OTHER THAN FOR WHICH IT IS SUPPLIED WITHOUT THE EXPRESS WRITTEN CONSENT OF GENERAC POWER SYSTEMS.
©GENERAC POWER SYSTEMS 2013

ELECTRONICALLY APPROVED
INSIDE WINDCHILL

GENERAC

TITLE
INSTALL PROTECTOR GAS (RG) 1.5L C1

ISSUE DATE:

SIZE	CAGE NO	DWG NO	REV
B	N/A	0K8420	E

SCALE	0.100	WT-KG	SEE SHT 1	SHEET	2 of 2