FFLED26SFNB44



Rectangular shaped LED floodlight designed to replace 100W Metal Halide. patent-pending "Air-Flow" technology ensures long LED and driver lifespan. Use for building façades lighting, sign lighting, LED landscape lighting and instant-on security lighting.

Color: Bronze

Weight: 14.2 lbs

Project:	**Type:**
Prepared By:	**Date:**

Driver Info

Type	Constant Current
120V	0.24A
208V	0.14A
240V	0.12A
277V	0.11A
Input Watts	28.3W

LED Info

Watts	26W
Color Temp	4000K (Neutral)
Color Accuracy	75 CRI
L70 Lifespan	100,000 Hours
Lumens	3,679
Efficacy	130 lm/W

Technical Specifications

Listings

UL Listed:

Suitable for wet locations. Suitable for mounting within 1.2m (4ft) of the ground.

DLC Listed:

This product is listed by Design Lights Consortium (DLC) as an ultra-efficient premium product that qualifies for the highest tier of rebates from DLC Member Utilities. DLC Product Code: PUBF9VXE

Performance

Lifespan:

100,000-Hour LED lifespan based on IES LM-80 results and TM-21 calculations

Electrical

Driver:

Constant Current, Class 2, 120-277V, 50-60Hz, 120V: 0.24A, 208V: 0.14A, 240V: 0.12A, 277V: 0.11A

Dimming Driver:

Driver includes dimming control wiring for 0-10V dimming systems. Requires separate 0-10V DC dimming circuit. Dims down to 10%.

THD:

8.47% at 120V, 17.83% at 277V

Power Factor:

99.1% at 120V, 90.3% at 277V

Note:

All values are typical (tolerance +/- 10%)

Construction

Lens:

Soda lime silica clear glass

Housing:

Die-cast aluminum housing, lens frame and mounting arm

Mounting:

Heavy-duty Slip Fitter for 2 3/8" OD pipe

IP Rating:

Ingress Protection rating of IP66 for dust and water

Maximum Ambient Temperature:

Suitable for use in up to 40°C (104°F)

Cold Weather Starting:

Minimum starting temperature is -40°C (-40°F)

Copyright © 2020 RAB Lighting All Rights Reserved Note: Specifications are subject to change at any time without notice

Technical Specifications (continued)

Construction

Effective Projected Area:

EPA = 0.75

Green Technology:

Mercury and UV free. RoHS-compliant components.

Finish:

Formulated for high durability and long-lasting color

Tilt Increment:

Rotates in 6 degree increments

LED Characteristics

LEDs:

Long-life, high-efficacy, surface-mount LEDs

Color Consistency:

3-step MacAdam Ellipse binning to achieve consistent fixture-to-fixture color

Color Stability:

LED color temperature is warrantied to shift no more than 200K in color temperature over a 5-year period

Color Uniformity:

RAB's range of Correlated Color Temperature follows the guidelines of the American National Standard for (SSL) Products, ANSI C78.377-2017.

Optical

NEMA Type:

NEMA Beam Spread of 4H x 4V

Other

Equivalency:

Equivalent to 100W Metal Halide

Warranty:

RAB warrants that our LED products will be free from defects in materials and workmanship for a period of five (5) years from the date of delivery to the end user, including coverage of light output, color stability, driver performance and fixture finish. RAB's warranty is subject to all terms and conditions found at rablighting.com/warranty.

Patents:

The FFLED design is protected by U.S. Pat. D643,147, Canada Pat. 140798, China Pat. ZL201130171304.1, Mexico Pat. 36757 and pending patent in Taiwan.

Buy American Act Compliance:

RAB values USA manufacturing! Upon request, RAB may be able to manufacture this product to be compliant with the Buy American Act (BAA). Please contact customer service to request a quote for the product to be made BAA compliant.

Dimensions

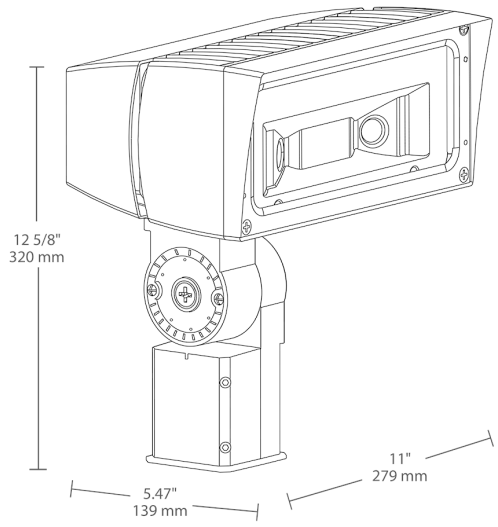

Features

- Ultra-efficient LED and optical design
- Replaces 100W MH floodlights
- 100,000-hour life based on LM-80 results and TM-21 calculations
- "Air-Flow" technology heatsink
- 5-Year, No-Compromise Warranty

Copyright © 2020 RAB Lighting All Rights Reserved Note: Specifications are subject to change at any time without notice

FFLED26SFNB44

Ordering Matrix

Family	Wattage	Mounting	Color Temp	NEMA Type	Finish	Driver	Options	Other Options
FFLED	26	SF	N	B44				
	18 = 18W **26 =** 26W **39 =** 39W **52 =** 52W **80 =** 80W	**Blank =** Swivel Arm **SF =** Slipfitter **T =** Trunnion	**Blank =** 5000K (Cool) **N =** 4000K (Neutral) **Y =** 3000K (Warm)	**Blank =** 7H x 6V **B55 =** 5H x 5V **B44 =** 4H x 4V	**Blank =** Bronze **W =** White	**Blank =** On/Off [1] **/D10 =** 0-10V Dimming **/480 =** 480V On/Off [2] **/E =** 120-277V Battery Backup **/EC =** Cold Start Battery Backup	**Blank =** No Option **/PC =** 120V Photocell **/PC2 =** 277V Photocell **/PCS =** 120V Swivel Photocell **/PCS2 =** 277V Swivel Photocell **/PCS4 =** 480V Swivel Photocell **/PCU =** 120-277V Button Photocell **/MS =** Mini Sensor **/STL3 =** Stealth Sensor	**Blank =** Standard **USA =** BAA Compliant

[1] Dimming Driver for 18W, 26W & 39W models only
[2] Not available for 80W models

Copyright © 2020 RAB Lighting All Rights Reserved Note: Specifications are subject to change at any time without notice