PRT30W/D10/WS



This ultra high efficiency LED garage light delivers up to 118 lumens per Watt. An integrated motion/photo sensor option provides multi-level lighting control. Available in 30, 42 and 55 Watt versions that replace 70 to 175 Watt metal halide fixtures. Fixture measures 14" L x 14" W.

Color: White

Weight: 10.6 lbs

Project:	**Type:**
Prepared By:	**Date:**

Driver Info

Type	Constant Current
120V	0.25A
208V	0.13A
240V	0.12A
277V	0.11A
Input Watts	29.40W

LED Info

Watts	30W
Color Temp	5000K (Cool)
Color Accuracy	78 CRI
L70 Lifespan	100,000 Hours
Lumens	3,832
Efficacy	130.3 lm/W

Technical Specifications

Listings

UL Listed:

Suitable for wet locations

IESNA LM-79 & LM-80 Testing:

RAB LED luminaires and LED components have been tested by an independent laboratory in accordance with IESNA LM-79 and LM-80.

California Title 24:

Can be used to conform with the requirements of California Title 24 Part 6.

DLC Listed:

This product is listed by Design Lights Consortium (DLC) as an ultra-efficient premium product that qualifies for the highest tier of rebates from DLC Member Utilities. DLC Product Code: P5BG1SGU

Construction

Lens:

Frosted polycarbonate

Gaskets:

High-temperature silicone

IP Rating:

Ingress Protection rating of IP66 for dust and water

Ambient Temperature:

Suitable for use in up to 40°C (104°F)

Finish:

Formulated for high durability and long-lasting color

Cold Weather Starting:

Minimum starting temperature is -40°C (-40°F)

Thermal Management:

Superior thermal management with external "Air-Flow" fins

Housing:

Die-cast aluminum and sheetmetal housing. Polycarbonate is affected by cleaning agents or other liquids containing partial solvents such as low molecular weight aldehydes and ethers, ketones, esters, aromatic hydrocarbons and perchlorinated hydrocarbons. Click here for a detailed list of damaging chemicals.

Mounting:

Die-cast aluminum backbox with (4) 1/2" conduit openings with plugs. Hinged tether for easy installation and wiring. Also accomodates 1/2" or 3/4" NPS pendants (provided by others).

Reflector:

Specular polycarbonate

Copyright © 2020 RAB Lighting All Rights Reserved Note: Specifications are subject to change at any time without notice

Technical Specifications (continued)

Construction

Green Technology:

Mercury and UV free. RoHS-compliant components.

LED Characteristics

LEDs:

Long-life, high-efficacy, surface-mount LEDs

Color Consistency:

7-step MacAdam Ellipse binning to achieve consistent fixture-to-fixture color

Color Stability:

LED color temperature is warrantied to shift no more than 200K in color temperature over a 5-year period

Color Uniformity:

RAB's range of Correlated Color Temperature follows the guidelines of the American National Standard for Specifications for the Chromaticity of Solid State Lighting (SSL) Products, ANSI C78.377-2017.

Performance

Lifespan:

100,000-Hour LED lifespan based on IES LM-80 results and TM-21 calculations

Other

Warranty:

RAB warrants that our LED products will be free from defects in materials and workmanship for a period of five (5) years from the date of delivery to the end user, including coverage of light output, color stability, driver performance and fixture finish. RAB's warranty is subject to all terms and conditions found at rablighting.com/warranty.

Equivalency:

Equivalent to 100W Metal Halide

Buy American Act Compliance:

RAB values USA manufacturing! Upon request, RAB may be able to manufacture this product to be compliant with the Buy American Act (BAA). Please contact customer service to request a quote for the product to be made BAA compliant.

Electrical

Drivers:

Constant Current, Class 2 100V - 277V, 50/60 Hz. THD <20%.

Dimming Driver:

Driver includes dimming control wiring for 0-10V dimming systems. Requires separate 0-10V DC dimming circuit. Dims down to 10%.

THD:

7.4% at 120V, 17.1% at 277V

Power Factor:

99.2% at 120V, 90.9% at 277V

Sensor Specifications

Operating Voltage:

120-277V

Power Consumption:

1W

0-10V Sinking Current:

50mA

Adjustable High and Low Modes:

High: 0-10V; Low: off, 0-9.8V

Adjustable Time Delay:

Amount of time in high mode with no motion before switching to low mode: 5 min., 1 -30 min.

Adjustable Cut Off Delay:

Time in which the fixture will remain on low mode with no motion before turning off and waiting for new motion to turn on: None, 1 -60 min., 1 -5 hrs.

Adjustable Sensitivy:

None, low, medium, maximum

Adjustable Setpoint:

None, 1 to 250 fc, auto

Operating Temperature:

-40°F to 167°F (-40°C to +75°C)

Operating Humidity:

20% to 90% noncondensing

Relay Life Rating:

200,000 cycles (120/277VAC), 50,000 cycles (230VAC)

IP Rating:

Ingress Protection rating of IP66 for dust and water

UL Listed:

Suitable for Wet Locations as factory installed

Handheld Wireless Configuration Tool:

Adjust settings using handheld wireless configuration tool. Only available with 0-10V dimming driver options. Handheld wireless configuration tool available here.

Copyright © 2020 RAB Lighting All Rights Reserved Note: Specifications are subject to change at any time without notice

PRT30W/D10/WS

Dimensions

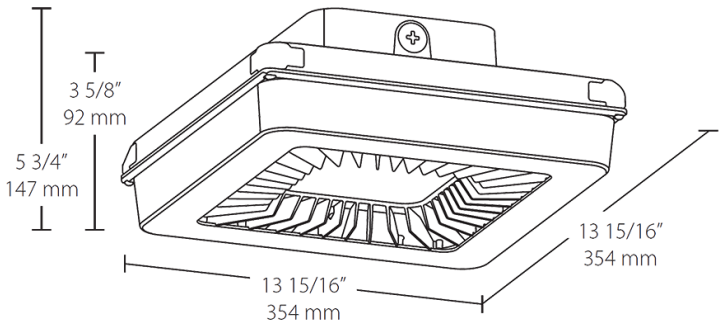

Features

- Ultra-high efficiency
- Pendant or surface mount
- Low glare, vandal-resistant polycarbonate lens
- 20% uplight eliminates "cave effect"
- 100,000-Hour LED lifespan
- 5-Year, No-Compromise Warranty

Copyright © 2020 RAB Lighting All Rights Reserved Note: Specifications are subject to change at any time without notice