FFLED80



Rectangular shaped LED floodlight designed to replace 250W Metal Halide. patent-pending "Air-Flow" technology ensures long LED and driver lifespan. Use for building façades lighting, sign lighting, LED landscape lighting and instant-on security lighting.

Color: Bronze

Weight: 12.9 lbs

Project:	**Type:**
Prepared By:	**Date:**

Driver Info

Type	Constant Current
120V	0.74A
208V	0.48A
240V	0.41A
277V	0.36A
Input Watts	88.8W

LED Info

Watts	80W
Color Temp	5000K (Cool)
Color Accuracy	72 CRI
L70 Lifespan	100,000 Hours
Lumens	9,672
Efficacy	108.9 lm/W

Technical Specifications

Listings

UL Listed:

Suitable for wet locations. Suitable for ground mounting.

IESNA LM-79 & LM-80 Testing:

RAB LED luminaires and LED components have been tested by an independent laboratory in accordance with IESNA LM-79 and LM-80.

DLC Listed:

This product is on the Design Lights Consortium (DLC) Qualified Products List and is eligible for rebates from DLC Member Utilities. DLC Product Code: PTKPSNQC

Electrical

Driver:

Constant Current, Class 2, 100-277V, 50/60 Hz, 6 kV surge protection,120V: 074 A, 208V: 048 A, 240V: 041 A, 277V: 036 A

Dimming Driver:

Driver includes dimming control wiring for 0-10V dimming systems. Requires separate 0-10V DC dimming circuit. Dims down to 10%.

Note:

All values are typical (tolerance +/- 10%)

LED Characteristics

LEDs:

Multi-chip, high-output, long-life LEDs

Color Consistency:

7-step MacAdam Ellipse binning to achieve consistent fixture-to-fixture color

Color Stability:

LED color temperature is warrantied to shift no more than 200K in color temperature over a 5-year period

Color Uniformity:

RAB's range of Correlated Color Temperature follows the guidelines of the American National Standard for (SSL) Products, ANSI C78.377-2017.

Performance

Lifespan:

100,000-Hour LED lifespan based on IES LM-80 results and TM-21 calculations

Construction

IP Rating:

Ingress Protection rating of IP66 for dust and water

Ambient Temperature:

Suitable for use in up to 40°C (104°F)

Cold Weather Starting:

Minimum starting temperature is -40°C (-40°F)

Copyright © 2020 RAB Lighting All Rights Reserved Note: Specifications are subject to change at any time without notice

Technical Specifications (continued)

Construction

Thermal Management Housing:

Superior heat sinking with external Air-Flow fins

Housing:

Die-cast aluminum housing, lens frame and mounting arm

Threaded Size:

1/2" threaded arm

Mounting:

Heavy-duty mounting arm with "O" ring seal & stainless steel screw

Effective Projected Area:

EPA = 0.65

Reflector:

Specular polycarbonate

Gaskets:

High-temperature silicone gaskets

Finish:

Formulated for high durability and long-lasting color

Green Technology:

Mercury and UV free. RoHS-compliant components.

Optical

NEMA Type:

NEMA Beam Spread of 7H x 6V

Other

Equivalency:

Equivalent to 250W Metal Halide

Warranty:

RAB warrants that our LED products will be free from defects in materials and workmanship for a period of five (5) years from the date of delivery to the end user, including coverage of light output, color stability, driver performance and fixture finish. RAB's warranty is subject to all terms and conditions found at rablighting.com/warranty.

Patents:

The FFLED design is protected by U.S. Pat. D643,147, Canada Pat. 140798, China Pat. ZL201130171304.1, Mexico Pat. 36757 and pending patent in Taiwan.

Buy American Act Compliance:

RAB values USA manufacturing! Upon request, RAB may be able to manufacture this product to be compliant with the Buy American Act (BAA). Please contact customer service to request a quote for the product to be made BAA compliant.

Dimensions

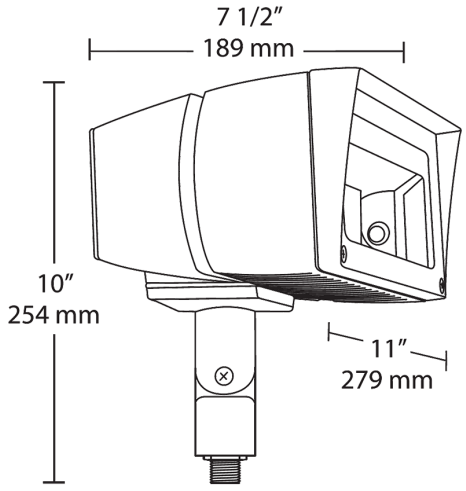

Features

- Ultra-efficient LED and optical design
- Replaces 250W MH floodlights
- 100,000-hour life based on LM-80 results and TM-21 calculations
- "Air-Flow" technology heatsink
- 5-Year, No-Compromise Warranty

Copyright © 2020 RAB Lighting All Rights Reserved Note: Specifications are subject to change at any time without notice

Ordering Matrix

Family	Wattage	Mounting	Color Temp	NEMA Type	Finish	Driver	Options	Other Options
FFLED	80							
	18 = 18W **26 =** 26W **39 =** 39W **52 =** 52W **80 =** 80W	**Blank =** Swivel Arm **SF =** Slipfitter **T =** Trunnion	**Blank =** 5000K (Cool) **N =** 4000K (Neutral) **Y =** 3000K (Warm)	**Blank =** 7H x 6V **B55 =** 5H x 5V **B44 =** 4H x 4V	**Blank =** Bronze **W =** White	**Blank =** On/Off [1] **/D10 =** 0-10V Dimming **/480 =** 480V On/Off [2]	**/PCS4 =** 480V Swivel Photocell **Blank =** No Option **/PCU =** 120V Button Photocell **/PC =** 120V Photocell **/PC2 =** 277V Photocell **/PCS =** 120V Swivel Photocell **/PCS2 =** 277V Swivel Photocell	**USA =** BAA Compliant **Blank =** Standard

[1] Dimming Driver for 18W, 26W & 39W models only
[2] Not available for 80W models

Copyright © 2020 RAB Lighting All Rights Reserved Note: Specifications are subject to change at any time without notice