FXLED78SFN/480



Color: Bronze

Weight: 24.0 lbs

Project:	**Type:**
Prepared By:	**Date:**

Driver Info

Type	Constant Current
120V	N/A
208V	N/A
240V	N/A
277V	N/A
Input Watts	158.3W

LED Info

Watts	78W
Color Temp	4000K (Neutral)
Color Accuracy	74 CRI
L70 Lifespan	100,000 Hours
Lumens	21,055
Efficacy	133 lm/W

Technical Specifications

Electrical

Driver:

Constant Current, Class 2, 2000mA, 347-480V, 50-60Hz, 0.17A, Power Factor 99%

THD:

8.68% at 480V

Power Factor:

96.1% at 480V

Photocell:

480V Swivel Photocell Included. Photocell is only compatible with 480V.

Note:

All values are typical (tolerance +/- 10%)

Starting/Operating Amps:

480V = 0.17A

Surge Protection:

4kV

Listings

UL Listed:

Suitable for wet locations. Suitable for ground mounting.

IESNA LM-79 & LM-80 Testing:

RAB LED luminaires and LED components have been tested by an independent laboratory in accordance with IESNA LM-79 and LM-80.

DLC Listed:

This product is listed by Design Lights Consortium (DLC) as an ultra-efficient premium product that qualifies for the highest tier of rebates from DLC Member Utilities. DLC Product Code: PUTE3M8E

Performance

Lifespan:

100,000-Hour LED lifespan based on IES LM-80 results and TM-21 calculations

Construction

IP Rating:

Ingress Protection rating of IP66 for dust and water

EPA:

2

Ambient Temperature:

Suitable for use in up to 40°C (104°F)

Copyright © 2020 RAB Lighting All Rights Reserved Note: Specifications are subject to change at any time without notice

Technical Specifications (continued)

Construction

Cold Weather Starting:

Minimum starting temperature is -40°C (-40°F)

Thermal Management:

Superior heat sinking with external Air-Flow fins

Lens:

Tempered glass lens

Housing:

Die-cast aluminum housing and door frame

Mounting:

Heavy-duty slipfitter for 2 3/8"OD pipe

Reflector:

Specular vacuum-metallized polycarbonate

Gaskets:

High-temperature silicone gaskets

Finish:

Formulated for high durability and long-lasting color

Green Technology:

Mercury and UV free. RoHS-compliant components.

Tilt Increment:

Rotates in 6 degree increments

Optical

NEMA Type:

NEMA Beam Spread of 6H x 6V

LED Characteristics

LEDs:

Six multi-chip, 13Watt high-output, long-life LEDs

Color Consistency:

3-step MacAdam Ellipse binning to achieve consistent fixture-to-fixture color

Color Stability:

LED color temperature is warrantied to shift no more than 200K in color temperature over a 5-year period

Color Uniformity:

RAB's range of Correlated Color Temperature follows the guidelines of the American National Standard for (SSL) Products, ANSI C78.377-2017.

Other

Equivalency:

Equivalent to 250W Metal Halide

Warranty:

RAB warrants that our LED products will be free from defects in materials and workmanship for a period of five (5) years from the date of delivery to the end user, including coverage of light output, color stability, driver performance and fixture finish. RAB's warranty is subject to all terms and conditions found at rablighting.com/warranty.

Patents:

The FXLED78 design is protected by U.S. Pat. D659,280, Canada Pat. 143155, China Pat. ZL201130443125.9, Mexico Pat. 36558 and pending patent in Taiwan.

Buy American Act Compliance:

RAB values USA manufacturing! Upon request, RAB may be able to manufacture this product to be compliant with the Buy American Act (BAA). Please contact customer service to request a quote for the product to be made BAA compliant.

Dimensions

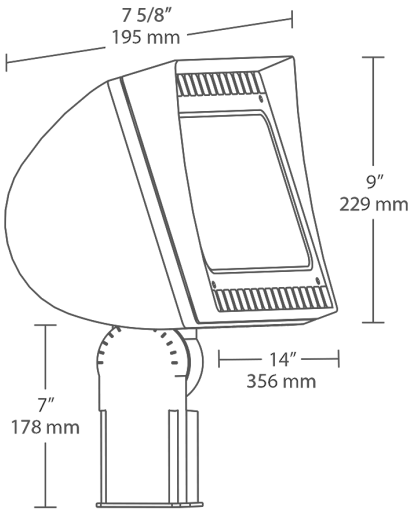

Features

- 66% energy cost savings vs. HID
- NEMA Type - 6H x 6V
- "Air-Flow" technology heat dissipation
- 100,000-hour LED lifespan
- 5-Year, No-Compromise Warranty

Copyright © 2020 RAB Lighting All Rights Reserved Note: Specifications are subject to change at any time without notice

FXLED78SFN/480

Ordering Matrix

Family	Wattage	Mounting	Color Temp	Finish	Driver	Options	Other Option
FXLED	78	SF	N		/480		
	78 = 78W **105 =** 105W **125 =** 125W **150 =** 150W	**SF =** Slipfitter **T =** Trunnion	**Blank =** 5000K (Cool) **N =** 4000K (Neutral) **Y =** 3000K (Warm)	**Blank =** Bronze **W =** White	**Blank =** Standard **/D10 =** 0-10V Dimming **/BL =** Bi-Level **/480 =** 480V	**Blank =** No Option **/LC =** Lightcloud® Control **/PCT =** 100-277V Twistlock **/PCT4 =** 480V Twistlock	**Blank =** Standard **USA =** BAA Compliant

Copyright © 2020 RAB Lighting All Rights Reserved Note: Specifications are subject to change at any time without notice