STL3FFLED18Y



Provides motion detection in both a 180° outward pattern as well as underneath with a full 360°. Also features an evening timer mode, which turns the light on for a preset amount of time after sunset. Comes with a full 10-year, no-compromise warranty.

Color: Bronze

Weight: 6.5 lbs

Project:	**Type:**
Prepared By:	**Date:**

Driver Info

Type	Constant Current
120V	0.2A
208V	N/A
240V	N/A
277V	N/A
Input Watts	22.1W

LED Info

Watts	18W
Color Temp	3000K (Warm)
Color Accuracy	84 CRI
L70 Lifespan	100,000 Hours
Lumens	1,422
Efficacy	64.3 lm/W

Technical Specifications

Listings

UL Listed:

Suitable for wet locations

IESNA LM-79 & LM-80 Testing:

RAB LED luminaires and LED components have been tested by an independent laboratory in accordance with IESNA LM-79 and LM-80.

Performance

Lifespan:

100,000-Hour LED lifespan based on IES LM-80 results and TM-21 calculations

Optical

NEMA Type:

7H x 6V Beam Spread

Construction

Airflow:

Airflow technology heat sink for superior cooling

Ambient Temperature:

Suitable for use in up to 40°C (104°F)

Cold Weather Starting:

Minimum starting temperature is -40°C (-40°F)

Mounting:

Heavy-duty mounting arm with "O" ring seal & stainless steel screw. CU4 plate allows the sensor to be mounted under a soffit.

Reflector:

Semi-specular anodized aluminum

Gaskets:

High-temperature silicone gaskets

Finish:

Formulated for high durability and long-lasting color

Green Technology:

Mercury and UV free. RoHS-compliant components.

Temperature Compensation:

Sensitivity adjusted automatically for consistent detection in hot and cold ambient temperatures

LED Characteristics

LEDs:

18 Watt high performance LEDs

Copyright © 2020 RAB Lighting All Rights Reserved Note: Specifications are subject to change at any time without notice

Technical Specifications (continued)

LED Characteristics

Color Consistency:

3-step MacAdam Ellipse binning to achieve consistent fixture-to-fixture color

Color Stability:

LED color temperature is warrantied to shift no more than 200K in color temperature over a 5-year period

Color Uniformity:

RAB's range of Correlated Color Temperature follows the guidelines of the American National Standard for (SSL) Products, ANSI C78.377-2017.

Scanning LEDs:

3 LEDs continually scan back-and-forth

Color Matched Lens:

Dark lens with bronze units, white lens with white units

Electrical

Driver:

Constant Current, Class 2, 100 - 277V, 50 - 60 Hz, 100 - 277VAC 0.4 Amps.

THD:

10.6% at 120V

Surge Protection:

6kV

Voltage:

120 volts AC 60 Hz

Power Consumption:

1W

Wall Switch Manual Override:

Two flip logic prevents activation by momentary power outages. Override resets to auto at dawn. No extra wiring needed.

Other

Equivalency:

2x75W PAR30

Patents:

The FFLED18 design is protected by patents pending in the U.S., Canada, China, Taiwan and Mexico. RAB sensor designs are protected under U.S. and International Intellectual Property laws.

Warranty:

RAB warrants that our LED products will be free from defects in materials and workmanship for a period of ten (10) years from the date of delivery to the end user, including coverage of light output, color stability, driver performance and fixture finish. RAB's warranty is subject to all terms and conditions found at rablighting.com/warranty.

Buy American Act Compliance:

RAB values USA manufacturing! Upon request, RAB may be able to manufacture this product to be compliant with the Buy American Act (BAA). Please contact customer service to request a quote for the product to be made BAA compliant.

Sensor Specifications

Time Adjustment:

5 seconds to 12 minutes

Wide Sensitivity Control:

Adjustable from 100% to 30%

Evening Timer:

Keeps lights on for 1-8 hours after dusk. Then sensor is motion activated until dawn.

Set it and forget it:

STL360's full coverage pattern reduces need for aiming and adjustment

Advanced Detection Logic:

Minimizes false triggers

Sensor Lens Masks:

Customized press apply lens mask included to reduce coverage easily

Sensor RF Immunity:

Circuits fully shielded for maximum radio frequency immunity

Photoelectric Control:

Deactivates lights during daylight. Fully adjustable for 24 hour operation or custom applications.

Sensor Detection:

Senses 180° out and 360° down for Total Detection

Sensor Switching Capacity:

8 Amps, 750 Watts LED @120 Volts 0.8pF Driver; 8 Amps, 500 Watts LED @120 Volts 0.5pF Driver.

Copyright © 2020 RAB Lighting All Rights Reserved Note: Specifications are subject to change at any time without notice

STL3FFLED18Y

Dimensions

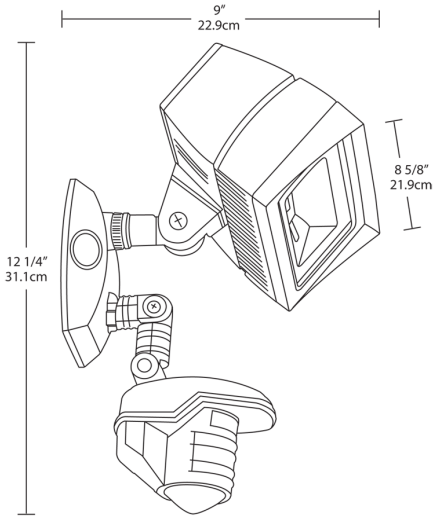

Features

- Ultra-efficient LED and optical design
- 10-Year, No-Compromise Warranty
- Senses 180° out + 360° down for total detection
- Radio frequency immunity
- 6000 volt surge protection
- Temperature compensation

Copyright © 2020 RAB Lighting All Rights Reserved Note: Specifications are subject to change at any time without notice