FXLED78TW



Color: White

Weight: 20.9 lbs

Project:	**Type:**
Prepared By:	**Date:**

Driver Info

Type	Constant Current
120V	0.78A
208V	0.45A
240V	0.39A
277V	0.34A
Input Watts	78.5W

LED Info

Watts	78W
Color Temp	5100K (Cool)
Color Accuracy	75 CRI
L70 Lifespan	100,000 Hours
Lumens	9,989
Efficacy	127.2 lm/W

Technical Specifications

Listings

UL Listed:

Suitable for wet locations. Suitable for mounting within 1.2m (4ft) of the ground.

IESNA LM-79 & IESNA LM-80 Testing:

RAB LED luminaires and LED components have been tested by an independent laboratory in accordance with IESNA LM-79 and LM-80.

DLC Listed:

This product is listed by Design Lights Consortium (DLC) as an ultra-efficient premium product that qualifies for the highest tier of rebates from DLC Member Utilities. DLC Product Code: P0000170A

Performance

Lifespan:

100,000-Hour LED lifespan based on IES LM-80 results and TM-21 calculations

Electrical

Driver:

Constant Current, Class 2, 120-277V, 50/60 Hz, 120V: 0.66A, 208V: 0.38A, 240V: 0.33A, 277V: 0.29A

THD:

6.12% at 120V, 7.79% at 277V

Power Factor:

99.8% at 120V, 94.9% at 277V

Note:

All values are typical (tolerance +/- 10%)

LED Characteristics

LEDs:

Long-life, high-efficacy, surface-mount LEDs

Color Stability:

LED color temperature is warrantied to shift no more than 200K in color temperature over a 5-year period

Color Uniformity:

RAB's range of Correlated Color Temperature follows the guidelines of the American National Standard for Specifications for the Chromaticity of Solid State Lighting (SSL) Products, ANSI C78.377-2017.

Construction

IP Rating:

Ingress Protection rating of IP66 for dust and water

EPA:

2

Ambient Temperature:

Suitable for use in up to -40°C (-40°F) to 40°C (104°F)

Copyright © 2020 RAB Lighting All Rights Reserved Note: Specifications are subject to change at any time without notice

Technical Specifications (continued)

Construction

Lens:

Tempered glass lens included

Housing:

Die-cast aluminum housing and door frame

Mounting:

Heavy-duty Trunnion mount with stainless steel hardware

Finish:

Formulated for high durability and long-lasting color

Other

Equivalency:

Equivalent to 250W Metal Halide

Warranty:

RAB warrants that our LED products will be free from defects in materials and workmanship for a period of five (5) years from the date of delivery to the end user, including coverage of light output, color stability, driver performance and fixture finish. RAB's warranty is subject to all terms and conditions found at rablighting.com/warranty.

Buy American Act Compliance:

RAB values USA manufacturing! Upon request, RAB may be able to manufacture this product to be compliant with the Buy American Act (BAA). Please contact customer service to request a quote for the product to be made BAA compliant.

Dimensions

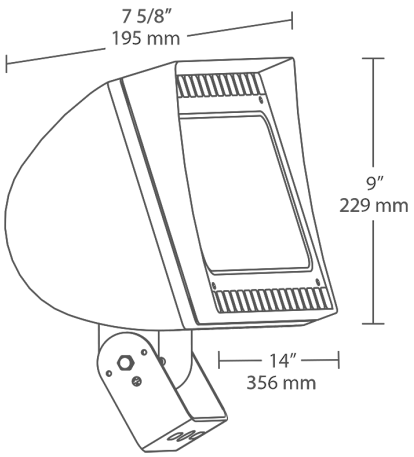

Features

- 66% energy cost savings vs. HID
- NEMA Type - 6H x 6V
- "Air-Flow" technology heat dissipation
- 100,000-hour LED lifespan
- 5-Year, No-Compromise Warranty

Ordering Matrix

Family	Wattage	Mounting	Color Temp	Finish	Driver	Options	Other Option
FXLED	78	T		W			
	78 = 78W **105 =** 105W **125 =** 125W **150 =** 150W	**SF =** Slipfitter **T =** Trunnion	**Blank =** 5000K (Cool) **N =** 4000K (Neutral) **Y =** 3000K (Warm)	**Blank =** Bronze **W =** White	**Blank =** Standard **/D10 =** 0-10V Dimming **/BL =** Bi-Level **/480 =** 480V	**Blank =** No Option **/LC =** Lightcloud® Control **/PCT =** 100-277V Twistlock **/PCT4 =** 480V Twistlock	**Blank =** Standard **USA =** BAA Compliant

Copyright © 2020 RAB Lighting All Rights Reserved Note: Specifications are subject to change at any time without notice