Product data sheet

Specifications



30mm Push Button, Types K, SK or KX, light module, transformer, 110/120 VAC

9001KM1

Product availability: Stock - Normally stocked in distribution facility

Main

Range of Product	Harmony 9001K Harmony 9001SK
Product or Component Type	Light block
Device short name	9001K
Bulb base	BA 9s
Light block supply	Direct via integral transformer 6 V

Complementary

Product Weight	0.317 lb(US) (0.144 kg)
Light source	Incandescent bulb
[Us] rated supply voltage	120 V AC
[Us] rated supply voltage	110...120 V
Light block supply	Via integral transformer
Supply frequency	50...60 Hz
Size	30 mm

Environment

Protective treatment	TC
Ambient Air Temperature for Storage	-40…158 °F (-40…70 °C)
Ambient Air Temperature for Operation	-13…158 °F (-25…70 °C)
IP degree of protection	IP10 IEC 60529
Standards	IEC 60947-5-4 IEC 60947-5-1 JIS C 4520 CSA C22.2 No 14 IEC 60947-1 UL 508 JIS C 852
Product Certifications	UL 508 NEMA
Electrical shock protection class	Class II conforming to IEC 61140
Vibration resistance	7 gn (f= 2…500 Hz) conforming to IEC 60068-2-6
Shock resistance	50 gn IEC 60068-2-27

Ordering and shipping details

Category	US10CS121435

Price is “List Price” and may be subject to a trade discount – check with your local distributor or retailer for actual price.

Disclaimer: This documentation is not intended as a substitute for and is not to be used for determining suitability or reliability of these products for specific user applications

Discount Schedule	0CS1
GTIN	785901725237
Returnability	Yes
Country of origin	MX

Packing Units

Unit Type of Package 1	PCE
Nbr. of units in pkg.	1
Package 1 Height	1.850 in (4.700 cm)
Package 1 Width	2.165 in (5.500 cm)
Package 1 Length	3.622 in (9.200 cm)
Package weight(Lbs)	2.610 oz (74.000 g)
Unit Type of Package 2	S03
Number of Units in Package 2	60
Package 2 Height	11.811 in (30.000 cm)
Package 2 Width	11.811 in (30.000 cm)
Package 2 Length	15.748 in (40.000 cm)
Package 2 Weight	10.714 lb(US) (4.860 kg)
Unit Type of Package 3	P06
Number of Units in Package 3	480
Package 3 Height	29.528 in (75.000 cm)
Package 3 Width	23.622 in (60.000 cm)
Package 3 Length	31.496 in (80.000 cm)
Package 3 Weight	103.353 lb(US) (46.880 kg)

Contractual warranty

Warranty (in months)	18

Environmental Data

Schneider Electric aims to achieve Net Zero status by 2050 through supply chain partnerships, lower impact materials, and circularity via our ongoing “Use Better, Use Longer, Use Again” campaign to extend product lifetimes and recyclability.

Environmental Data explained >

How we assess product sustainability >

Environmental footprint

Total lifecycle Carbon footprint	**0.6 kg CO2 eq.**
Carbon footprint of the manufacturing phase [A1 to A3]	**0.4 kg CO2 eq.**
Carbon footprint of the distribution phase [A4]	**0 kg CO2 eq.**
Carbon footprint of the installation phase [A5]	**0 kg CO2 eq.**
Carbon footprint of the use phase [B2, B3, B4, B6]	**0 kg CO2 eq.**
Carbon footprint of the end-of-life phase [C1 to C4]	**0.2 kg CO2 eq.**
Environmental Disclosure	Product Environmental Profile

Use Better

Materials and Substances

Packaging made with recycled cardboard	**Yes**
Packaging without single use plastic	**Yes**
SCIP Number	**Ae0c4eb9-0bfb-40a4-851f-5c619fbe777d**
EU RoHS Directive	Compliant By Exemption
REACh Regulation	Reference contains Substances of Very High Concern above the threshold
California proposition 65	**WARNING: This product can expose you to chemicals including: Lead and lead compounds, which is known to the State of California to cause cancer and birth defects or other reproductive harm. For more information go to www.P65Warnings.ca.gov**

Use Longer

Lifetime extension

Repair	**No**

Use Again

Repack and remanufacture

Recyclability potential, in %	**49**
Circularity Profile	End of Life Information
Take-back	**No**
WEEE Label	**The product must be disposed on European Union markets following specific waste collection and never end up in rubbish bins.**

Dimensions Drawings

Dimensions

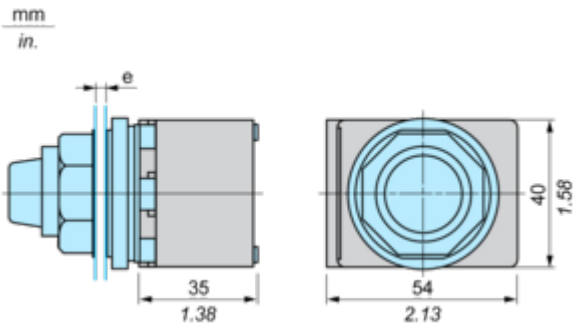

e panel thickness: 1 to 6 mm / 0.04 to 0.24 in.

Offer Marketing Illustration

Product benefits / Features



Offer Marketing Illustration

Product benefits / Features



Image of product / Alternate images

Alternative







