Features

- 4-channel isolated barrier
- 24 V DC supply (Power Rail)
- Dry contact or NAMUR inputs
- 50 % less wiring, 2:1 technology
- Relay contact output
- Line fault detection (LFD)
- Reversible mode of operation

Function

This isolated barrier is used for intrinsic safety applications. It transfers digital signals (NAMUR sensors/mechanical contacts) from a hazardous area to a safe area.

Each sensor or switch controls one form A normally open relay contact for the safe area load. A special 2:1 wire-saving technology is available on this isolator, reducing field wiring by 50 %.

Switch S1 is used to enable or disable line fault detection of the field circuit. The 2:1 mode is selected with switch S2 while the remaining switches, S3 ... S6, are used for reversing the normal output state of the relays.

A unique collective error messaging feature is available when used with the Power Rail system.

Assembly

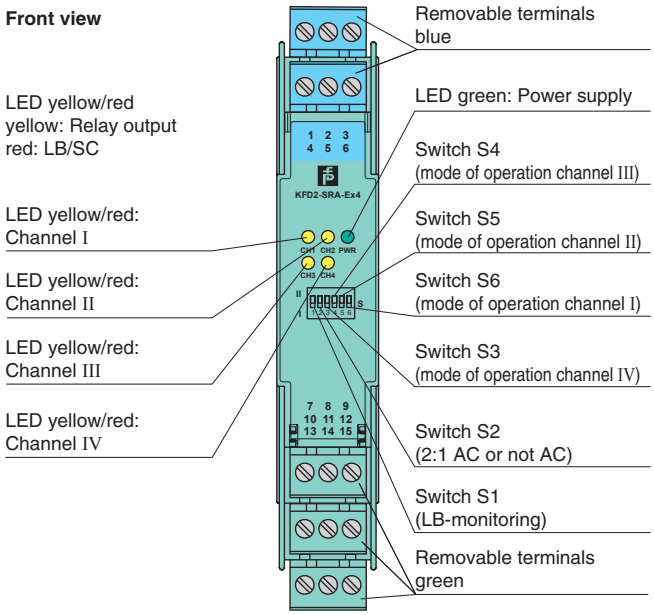

Connection

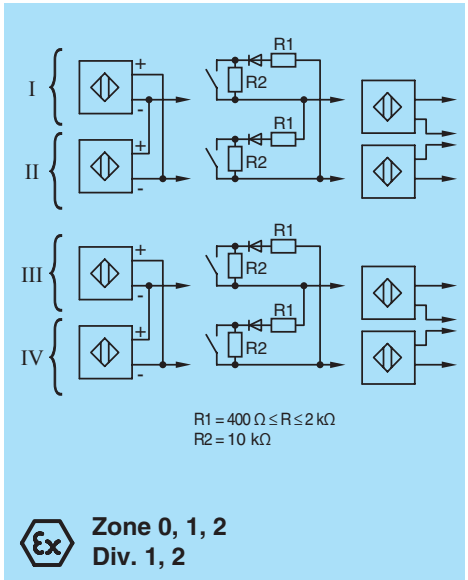

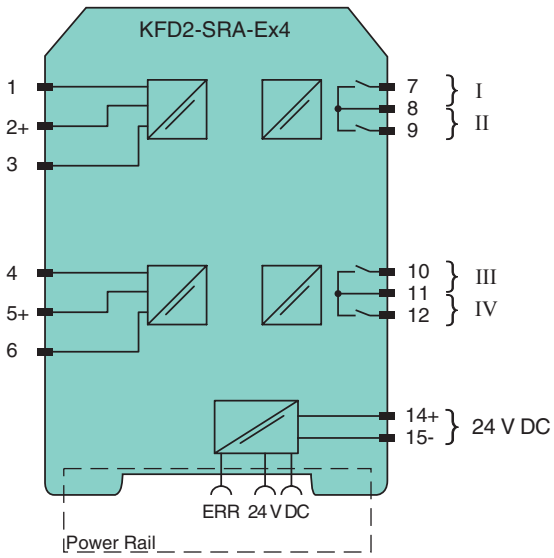

Release date 2016-09-13 11:48 Date of issue 2016-09-13 190176_eng.xml

General specifications		
Signal type		Digital Input
Supply		
Connection		Power Rail or terminals 14+, 15-
Rated voltage	U_n	19 ... 30 V DC
Ripple		≤ 10 %
Rated current	I_n	45 ... 70 mA
Power dissipation		1.2 W
Input		
Connection		terminals 1-, 2+, 3-; 4-, 5+, 6-
Rated values		acc. to EN 60947-5-6 (NAMUR), see system description for electrical data
Open circuit voltage/short-circuit current		approx. 8 V DC / approx. 8 mA
Switching point/switching hysteresis		1.2 ... 2.1 mA / approx. 0.2 mA
Pulse/Pause ratio		≥ 35 ms / ≥ 35 ms (non-AC operation) ≥ 70 ms / ≥ 70 ms (AC operation)
Line fault detection		breakage I ≤ 0.15 mA , short-circuit I > 6 mA
Output		
Connection		output I: terminals 7, 8 ; output II: terminals 8, 9 ; output III: terminals 10, 11 ; output IV: terminals 11, 12
Output I ... IV		Signal I ... Signal IV ; relay
Contact loading		253 V AC/2 A /cos ϕ > 0.7; 40 V DC/2 A resistive load;
Energized/De-energized delay		approx. 30 ms / approx. 30 ms
Mechanical life		5 x 10^6 switching cycles
Collective error message		Power Rail
Transfer characteristics		
Switching frequency		≤ 10 Hz (non-AC operation) ≤ 3 Hz (AC operation)
Electrical isolation		
Input/Output		reinforced insulation according to IEC/EN 61010-1, rated insulation voltage 300 V_{eff}
Input/power supply		reinforced insulation according to IEC/EN 61010-1, rated insulation voltage 300 V_{eff}
Output/power supply		reinforced insulation according to IEC/EN 61010-1, rated insulation voltage 300 V_{eff}
Output/Output		basic insulation according to IEC/EN 61010-1, rated insulation voltage 300 V_{eff}
Directive conformity		
Electromagnetic compatibility		
Directive 2014/30/EU		EN 61326-1:2013 (industrial locations)
Low voltage		
Directive 2014/35/EU		EN 61010-1:2010
Conformity		
Electromagnetic compatibility		NE 21:2006
Degree of protection		IEC 60529:2001
Input		EN 60947-5-6:2000
Ambient conditions		
Ambient temperature		-20 ... 60 °C (-4 ... 140 °F)
Mechanical specifications		
Degree of protection		IP20
Mass		approx. 150 g
Dimensions		20 x 119 x 115 mm (0.8 x 4.7 x 4.5 inch) , housing type B2
Data for application in connection with hazardous areas		
EC-Type Examination Certificate		ZELM 99 ATEX 0009
Group, category, type of protection		⟨Ex⟩ II (1)G [Ex ia Ga] IIC ⟨Ex⟩ II (1)D [Ex ia Da] IIIC ⟨Ex⟩ I (M1) [Ex ia Ma] I
Input		Ex ia IIC
Voltage	U_o	10 V
Current	I_o	14 mA
Power	P_o	35 mW (linear characteristic)
Supply		
Maximum safe voltage	U_m	40 V DC (Attention! U_m is no rated voltage.)
Output		
Contact loading		230 V AC + 10 % / 2 A / 100 VA / cos ϕ ≥ 0.7; 40 V DC / 2 A resistive load
Error message output		
Maximum safe voltage	U_m	40 V DC
Electrical isolation		
Input/input		not available
Input/Output		safe electrical isolation acc. to IEC/EN 60079-11, voltage peak value 375 V
Input/power supply		safe electrical isolation acc. to IEC/EN 60079-11, voltage peak value 375 V
Directive conformity		

Release date 2016-09-13 11:48 Date of issue 2016-09-13 190176_eng.xml

Directive 2014/34/EU	EN 60079-0:2012+A11:2013 , EN 60079-11:2012 , EN 60079-26:2007 , EN 50303:2000
International approvals	
UL approval	
Control drawing	116-0145
IECEx approval	IECEx TUN 04.0003
Approved for	[Ex ia Ga] IIC , [Ex ia Da] IIIC , [Ex ia Ma] I
General information	
Supplementary information	EC-Type Examination Certificate, Statement of Conformity, Declaration of Conformity, Attestation of Conformity and instructions have to be observed where applicable. For information see www.pepperl-fuchs.com.

Configuration

Requirements for using the 2:1-transfer method

In the 2:1-transfer method the switch amplifier transfers digital signals from the hazardous area by means of the patented new 2:1-transfer method. This method allows to transfer two independent digital signals by means of a single pair of conductors.

The prerequisite for the use of the 2:1-transfer method is that sensors with reverse polarity protected diode are used. Pepperl+Fuchs offers suitable sensors for alternating polarity. When using sensors without integrated reverse polarity protection diode, clamp modules F-KD-Ex2 or F-KDR-Ex2 (with diode network) have to be fitted. In case of F-KDR-Ex2, a resistor combination has been fitted in addition for line fault detection of mechanical switches.

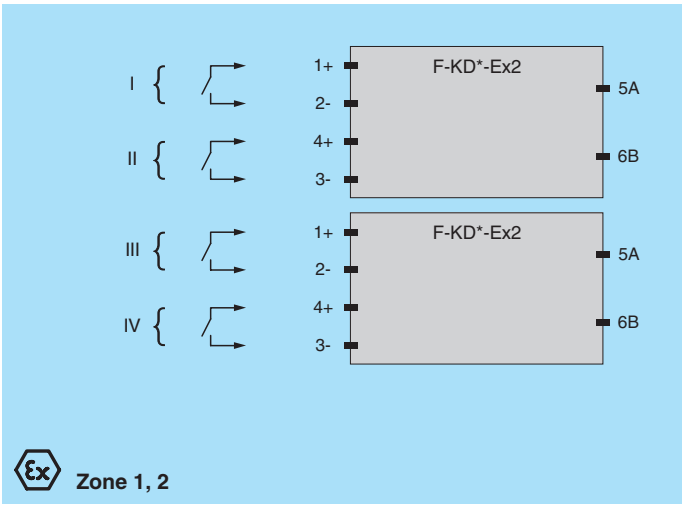

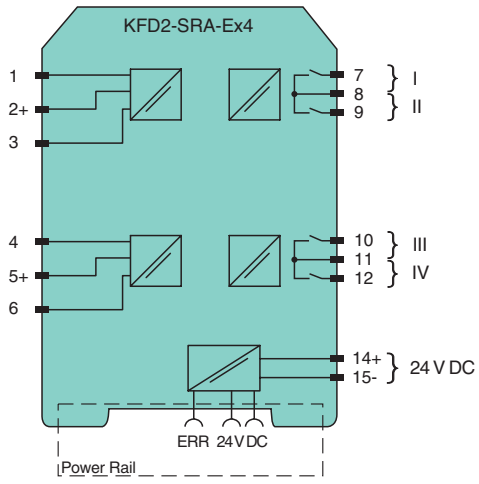

Comments

When installing a serial diode, it has to be assured that the current in reverse direction is below a value of 0.15 mA in order to enable the line fault detection.

Release date 2016-09-13 11:48 Date of issue 2016-09-13 190176_eng.xml

Functions of the switches

Line fault detection	Pos.	Input	
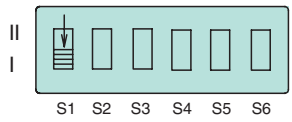	I	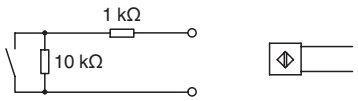	Line fault detection
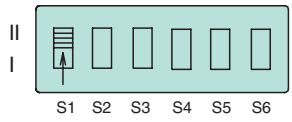	II	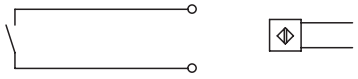	no Line fault detection

AC function	Pos.	Input	
	I	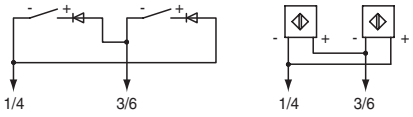	AC function (2:1 transfer technique)
	II	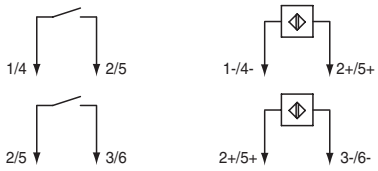	none AC function

Mode of operation	Pos.	Input	
 S3: channel IV S4: channel III S5: channel II S6: channel I	I	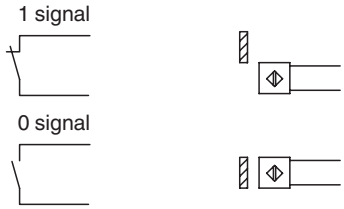	energized de-energized
 S3: channel IV S4: channel III S5: channel II S6: channel I	II	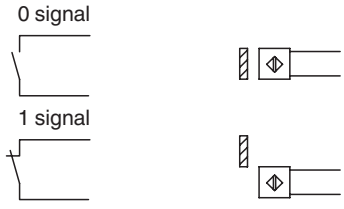	energized de-energized

Release date 2016-09-13 11:48 Date of issue 2016-09-13 190176_eng.xml

Pepperl+Fuchs sensors for alternating polarity

Release date 2016-09-13 11:48 Date of issue 2016-09-13 190176_eng.xml

Model number	Housing
NCB1,5-6,5M25-N0	6.5 mm metal
NCB1,5-6,5M25-N0-10M	6.5 mm metal
NCB1,5-6,5M25-N0-5M	6.5 mm metal
NCB1,5-6,5M25-N0-V1	6.5 mm metal
NCB1,5-8GM25-N0	M8 metal
NCB1,5-8GM25-N0-10M	M8 metal
NCB1,5-8GM25-N0-5M	M8 metal
NCB1,5-8GM25-N0-V1	M8 metal
NCB10-30GM40-N0	M30 metal
NCB10-30GM40-N0-10M	M30 metal
NCB10-30GM40-N0-15M	M30 metal
NCB10-30GM40-N0-5M	M30 metal
NCB10-30GM40-N0-V1	M30 metal
NCB15-30GM40-N0	M30 metal
NCB15-30GM40-N0-V1	M30 metal
NCB2-12GK35-N0	M12 plastic
NCB2-12GM35-N0	M12 metal
NCB2-12GM35-N0-10M	M12 metal
NCB2-12GM35-N0-21M	M12 metal
NCB2-12GM35-N0-5M	M12 metal
NCB2-12GM35-N0-V1	M12 metal
NCB2-F1-N0	F1
NCB2-V3-N0	V3
NCB2-V3-N0-V5	V3
NCB4-12GM40-N0	M12 metal
NCB4-12GM40-N0-V1	M12 metal
NCB5-18GK40-N0	M18 plastic
NCB5-18GM40-N0	M18 metal
NCB5-18GM40-N0-10M	M18 metal
NCB5-18GM40-N0-15M	M18 metal
NCB5-18GM40-N0-5M	M18 metal
NCB5-18GM40-N0-V1	M18 metal
NCB5-18GM70-N0	M18 metal
NCB8-18GM40-N0	M18 metal
NCB8-18GM40-N0-V1	M18 metal
NCN15-30GM40-N0	M30 metal
NCN15-30GM40-N0-10M	M30 metal
NCN15-30GM40-N0-20M	M30 metal
NCN15-30GM40-N0-V1	M30 metal
NCN3-F25F-N4-V1	F25
NCN3-F25F-N4-Y188326	F25
NCN3-F25F-N4-Y41364	F25
NCN3-F25F-N4-Y47292	F25
NCN3-F25-N4	F25
NCN3-F25-N4-0,14	F25
NCN3-F25-N4-5M	F25
NCN3-F25-N4-K1V1	F25
NCN3-F25-N4-V1	F25
NCN3-F25-N4-V1-Y205258	F25
NCN3-F31K-N4	F31
NCN3-F31K-N4-K	F31
NCN3-F31K-N4-V1-V1	F31
NCN3-F31-N4-K	F31
NCN3-F31-N4-K-K	F31
NCN3-F31-N4-V1	F31
NCN3-F31-N4-V16-K	F31
NCN3-F31-N4-V16-V16	F31
NCN3-F31-N4-V16-V1-Y201296	F31
NCN3-F31-N4-V18	F31
NCN3-F31-N4-V18-Y202412	F31
NJ4-12GK-N-5M	M12 plastic
NJ4-12GM-N	M12 metal
NJ4-12GM-N-10M	M12 metal

Model number	Housing
NCN3-F31-N4-V1-Y186239	F31
NCN3-F31-N5-V18-V1	F31
NCN4-12GK35-N0	M12 plastic
NCN4-12GM35-N0	M12 metal
NCN4-12GM35-N0-10M	M12 metal
NCN4-12GM35-N0-5M	M12 metal
NCN4-12GM35-N0-V1	M12 metal
NCN4-V3-N0	V3
NCN8-18GK40-N0	M18 plastic
NCN8-18GM40-N0	M18 metal
NCN8-18GM40-N0-10M	M18 metal
NCN8-18GM40-N0-5M	M18 metal
NCN8-18GM40-N0-V1	M18 metal
NJ0,8-4,5-N	4.5 mm metal
NJ0,8-5GM-N	M5 metal
NJ0,8-5GM-N-10M	M5 metal
NJ0,8-5GM-N-5M	M5 metal
NJ1,5-6,5-N	6.5 mm metal
NJ1,5-6,5-N-15M	6.5 mm metal
NJ1,5-6,5-N-5M	6.5 mm metal
NJ1,5-6,5-N-Y10324	6.5 mm metal
NJ1,5-8GM-N	M8 metal
NJ1,5-8GM-N-10M	M8 metal
NJ1,5-8GM-N-5M	M8 metal
NJ1,5-8GM-N-D	M18 metal
NJ1,5-8GM-N-D-10M	M18 metal
NJ1,5-8GM-N-D-V1	M18 metal
NJ1,5-8GM-N-D-V1-Y29033	M18 metal
NJ1,5-8GM-N-V1	M8 metal
NJ10-30GK-SN	M30 plastic
NJ10-30GK-SN-10M	M30 plastic
NJ10-30GK-SN-15M	M30 plastic
NJ10-30GM-N	M30 metal
NJ15-30GK-SN	M30 plastic
NJ15-30GK-SN-20M	M30 plastic
NJ2-11-N	11 mm plastic
NJ2-11-N-G	M14 metal
NJ2-11-N-G-15M	M14 metal
NJ2-11-N-G-5M	M14 metal
NJ2-11-N-G-Y28795	M14 metal
NJ2-11-SN	11 mm plastic
NJ2-11-SN-G	M14 metal
NJ2-11-SN-G-10M	M14 metal
NJ2-11-SN-G-5M	M14 metal
NJ2-12GK-N	M12 plastic
NJ2-12GK-N-5M	M12 plastic
NJ2-12GK-SN	M12 plastic
NJ2-12GK-SN-10M	M12 plastic
NJ2-12GM-N	M12 metal
NJ2-12GM-N-10M	M12 metal
NJ2-12GM-N-21M	M12 metal
NJ2-12GM-N-5M	M12 metal
NJ2-12GM-N-V1	M12 metal
NJ2-14GM-N-V1-Y19784	M14 metal
NJ2-F1-N	F1
NJ2-V3-N	V3
NJ2-V3-N-V5	V3
NJ3-18GK-S1N	M18 plastic
NJ4-12GK-N	M12 plastic
NJ4-12GK-N-10M	M12 plastic
PL1-F25-N4-K	Platine
PL2-F25-N4-K	Platine
PL2-F25-SN4-K	Platine

Release date 2016-09-13 11:48 Date of issue 2016-09-13 190176_eng.xml

Model number	Housing
NJ4-12GM-N-20M	M12 metal
NJ4-12GM-N-5M	M12 metal
NJ4-12GM-N-V1	M12 metal
NJ4-30GM-N-200	M30 metal
NJ4-30GM-N-200-10M	M30 metal
NJ5-11-N	11 mm plastic
NJ5-11-N-15M	11 mm plastic
NJ5-11-N-5M	11 mm plastic
NJ5-11-N-G	M14 metal
NJ5-11-N-G-10M	M14 metal
NJ5-11-N-G-5M	M14 metal
NJ5-11-N-G-6M	M14 metal
NJ5-18GK-N	M18 plastic
NJ5-18GK-N-10M	M18 plastic
NJ5-18GK-N-5M	M18 plastic
NJ5-18GK-SN	M18 plastic
NJ5-18GK-SN-10M	M18 plastic
NJ5-18GK-SN-5M	M18 plastic
NJ5-18GM-N	M18 metal
NJ5-18GM-N-10M	M18 metal
NJ5-18GM-N-5M	M18 metal
NJ5-18GM-N-V1	M18 metal
NJ5-30GK-S1N	M30 plastic
NJ5-30GK-S1N-10M	M30 plastic
NJ5-30GK-S1N-5M	M30 plastic
NJ6-22-SN	22 mm plastic
NJ6-22-SN-G	PG21 metal
NJ6-22-SN-G-10M	PG21 metal
NJ6-22-SN-G-3M	PG21 metal
NJ8-18GK-N	M18 plastic
NJ8-18GK-N-10M	M18 plastic
NJ8-18GM-N	M18 metal
NJ8-18GM-N-5M	M18 metal
NJ8-18GM-N-V1	M18 metal

Model number	Housing
PL3-F25-N4-K	Platine
PL3-F25-SN4-K	Platine
PL4-F25-N4-K	Platine
RC10-14-N0	Ring
RC15-14-N0	Ring
SC2-N0	Slot 2 mm
SC3,5-G-N0	Slot 3.5 mm
SC3,5-G-N0-6M	Slot 3.5 mm
SC3,5-N0	Slot 3.5 mm
SC3,5-N0-BU	Slot 3.5 mm
SC3,5-N0-GN	Slot 3.5 mm
SC3,5-N0-WH	Slot 3.5 mm
SC3,5-N0-Y37317	Slot 3.5 mm
SC3,5-N0-YE	Slot 3.5 mm
SJ2-N	Slot 2 mm
SJ2-S1N	Slot 2 mm
SJ2-SN	Slot 2 mm
SJ3,5-N	Slot 3.5 mm
SJ3,5-G-N	Slot 3.5 mm
SJ3,5-G-N-Y26478	Slot 3.5 mm
SJ3,5-N-BU	Slot 3.5 mm
SJ3,5-N-GN	Slot 3.5 mm
SJ3,5-N-LED	Slot 3.5 mm
SJ3,5-N-LED-Y43416	Slot 3.5 mm
SJ3,5-N-WEISS	Slot 3.5 mm
SJ3,5-N-Y08944	Slot 3.5 mm
SJ3,5-N-Y33714	Slot 3.5 mm
SJ3,5-N-Y41400-WEISS	Slot 3.5 mm
SJ3,5-N-YE	Slot 3.5 mm
SJ3,5-S1N	Slot 3.5 mm
SJ3,5-SN	Slot 3.5 mm
SJ3,5-SN-Y27487	Slot 3.5 mm
SJ3,5-SN-Y41402	Slot 3.5 mm

Accessories

Power feed module KFD2-EB2

The power feed module is used to supply the devices with 24 V DC via the Power Rail. The fuse-protected power feed module can supply up to 150 individual devices depending on the power consumption of the devices. A galvanically isolated mechanical contact uses the Power Rail to transmit collective error messages.

Power Rail UPR-03

The Power Rail UPR-03 is a complete unit consisting of the electrical inset and an aluminium profile rail 35 mm x 15 mm. To make electrical contact, the devices are simply engaged.

Profile Rail K-DUCT with Power Rail

The profile rail K-DUCT is an aluminum profile rail with Power Rail insert and two integral cable ducts for system and field cables. Due to this assembly no additional cable guides are necessary.



Power Rail and Profile Rail must not be fed via the device terminals of the individual devices!

Clamp module F-KD-Ex2

Clamp module with integrated diode network

Clamp module F-KDR-Ex2

Clamp module with integrated diode and resistance network

Release date 2016-09-13 11:48 Date of issue 2016-09-13 190176_eng.xml