HALED12-80FRN



Weight: 0.3 lbs

Project:	**Type:**
Prepared By:	**Date:**

Driver Info

Type	N/A
120V	N/A
208V	N/A
240V	N/A
277V	N/A
Input Watts	0.00W

LED Info

Watts	0W
Color Temp	N/A
Color Accuracy	N/A
L70 Lifespan	50,000 Hours
Lumens	N/A
Efficacy	N/A

Technical Specifications

Listings

UL Listed:

Suitable for wet locations in a covered ceiling

Performance

Lifespan:

50,000-Hour LED lifespan based on IES LM-80 results and TM-21 calculations

LED Characteristics

LEDs:

Long-life, high-efficiency, surface-mount LEDs

Electrical

Driver:

Class 2, 120-277V, 50/60 Hz, 120V: 0.18A, 208V: 0.07A, 240V: 0.06A, 277V: 0.05A

Dimming Driver:

Compatible with TRIAC dimming at 120V.
See dimmer compatibility guide here.

Surge Protection:

4kV

Optical

Optic:

The HALED Light Engine comes standard with an 80° optic with frosted lens installed

Construction

IC Rated:

Suitable for direct contact with insulation

Housing:

Precision die-cast aluminum

Trim:

Spun aluminum, Alzak anodized, and luxurious electroplated finishes available

Lens:

Standard, forsted lens eliminates "hot spots", and helps provide smooth, uniform light

Green Technology:

Mercury and UV free. RoHS-compliant components.

Finish:

Formulated for high durability and long-lasting color

Other

Warranty:

RAB warrants that our LED products will be free from defects in materials and workmanship for a period of five (5) years from the date of delivery to the end user, including coverage of light output, color stability, driver performance and fixture finish. RAB's warranty is subject to all terms and conditions found at rablighting.com/warranty.

Copyright © 2020 RAB Lighting All Rights Reserved Note: Specifications are subject to change at any time without notice

Technical Specifications (continued)

Other

Buy American Act Compliance:

RAB values USA manufacturing! Upon request, RAB may be able to manufacture this product to be compliant with the Buy American Act (BAA). Please contact customer service to request a quote for the product to be made BAA compliant.

Dimensions

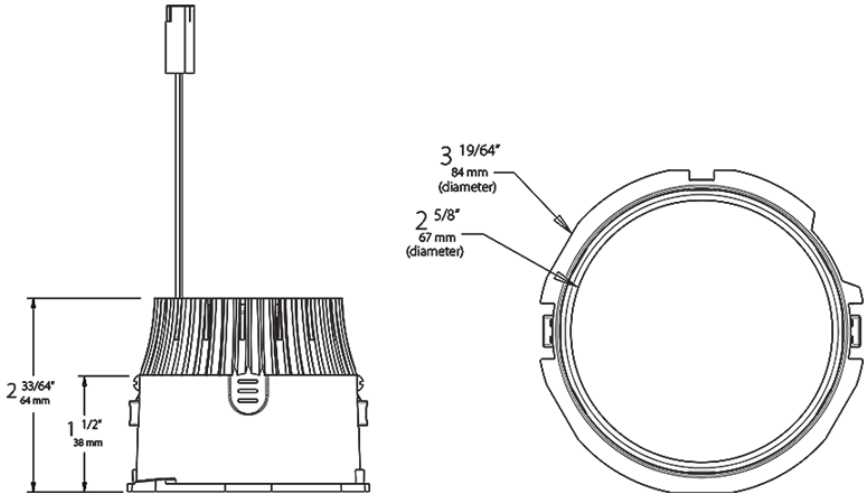

Ordering Matrix

Family	Wattage	Beam Spread	Color Temp	CRI
HALED			12	80FR
	8 = 8W **12 =** 12W	**80FR =** 80° Frosted Lens	**N =** 4000K (Neutral) **YN =** 3500K (Warm Neutral) **Y =** 3000K (Warm) **YY =** 2700K (Residential Warm)	**Blank =** 80 CRI **HC =** 90 CRI

Copyright © 2020 RAB Lighting All Rights Reserved Note: Specifications are subject to change at any time without notice