This document was generated on 03/22/2017

PLEASE CHECK WWW.MOLEX.COM FOR LATEST PART INFORMATION

Part Number: 1300140015

Status: Active

Overview: Brad® Mini-Change® Connectors

Description: Mini-Change® B-Size Receptacle, 6 Poles, 1/2" - 14 NPT Threads, Female (Straight) to 16 AWG Leads, 0.305m (1.0') Length

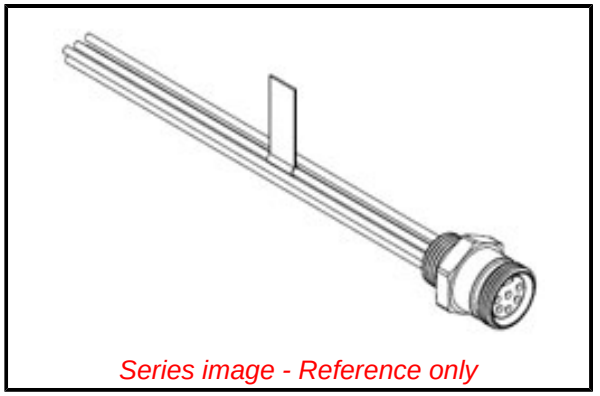

Series image - Reference only

Documents:

Drawing (PDF)

RoHS Certificate of Compliance (PDF)

Agency Certification	
CSA	LR6837
UL	E152210
General	
Product Family	Industrial Receptacles
Series	130014
Comments	B-Size (1" - 16 UNC)
IP Rating	IP67
NEMA Rating	NEMA 6
Overview	Brad® Mini-Change® Connectors
Product Name	Mini-Change®
Type	Single Ended (pigtail)
UPC	78678844062
Physical	
Coupling Type	External Thread
Gender	Female
Keyway	Single
Length	0.305m
Material - Component	Zinc Die-Cast with Black Epoxy
Mounting Thread Size	1/2" - 14 NPT
Orientation	Straight
Panel Mount	N/A
Poles	6
Temperature Range - Operating	-20°C to +105°C
Wire Size AWG	16
Wire/Cable Type	UL 1015
Electrical	
Current - Maximum per Contact	8.0A
Voltage - Maximum	600V AC/DC
Material Info	
Engineering Number	2R6004A20A120
Reference - Drawing Numbers	
Sales Drawing	SD-130014-002, SD-130014-009

EU ELV
Not Relevant

EU RoHS **China RoHS**
Not Reviewed

REACH SVHC
Not Reviewed

Halogen-Free Status
Not Reviewed

Need more information on product environmental compliance?

Email productcompliance@molex.com
Please visit the Contact Us section for any non-product compliance questions.

China ROHS	Not Reviewed
ELV	Not Relevant
RoHS Phthalates	Not Reviewed

Search Parts in this Series
130014 Series

This document was generated on 03/22/2017

PLEASE CHECK WWW.MOLEX.COM FOR LATEST PART INFORMATION