Product data sheet

Specifications



Transformer, Type T, industrial control, 50VA, 1 phase, 240x480V primary, 120V secondary, 55C rise

9070T50D1

Product availability: Stock - Normally stocked in distribution facility

Main

Product Type	Industrial Control Transformer
Type	T

Complementary

Number of Phases	1 phase
Power Rating	50 VA UL 50 VA CSA 50 VA NOM 50 VA CE
Primary to Secondary Voltage	240 x 480 V 120 V 230 x 460 V 115 V 220 x 440 V 110 V
Temperature Rise	55 °C
Electrical Connection	Screw clamp terminals
Height	2.58 in (65.53 mm)
Width	3 in (76.2 mm)
Depth	3.09 in (78.49 mm)
Material	Copper: winding
Fingersafe Cover Compatibility	FSC1

Environment

Certifications	UL listed file E61239 CSA file LR37055 guide 184-N-90
Enclosure Type	Not rated (open device)
Insulation Temperature	221 °F (105 °C)

Ordering and shipping details

Category	US10CP816200
Discount Schedule	0CP8
GTIN	785901904632
Returnability	Yes
Country of origin	MX

Packing Units

Unit Type of Package 1	PCE

Price is “List Price” and may be subject to a trade discount – check with your local distributor or retailer for actual price.

Disclaimer: This documentation is not intended as a substitute for and is not to be used for determining suitability or reliability of these products for specific user applications

Nbr. of units in pkg.	1
Package 1 Height	3.700 in (9.398 cm)
Package 1 Width	4.100 in (10.414 cm)
Package 1 Length	4.300 in (10.922 cm)
Package weight(Lbs)	2.489 lb(US) (1.129 kg)

Contractual warranty

Warranty (in months)	18

Environmental Data

Schneider Electric aims to achieve Net Zero status by 2050 through supply chain partnerships, lower impact materials, and circularity via our ongoing “Use Better, Use Longer, Use Again” campaign to extend product lifetimes and recyclability.

Environmental Data explained >

How we assess product sustainability >

Use Better

Materials and Substances

Packaging made with recycled cardboard	**Yes**
Packaging without single use plastic	**No**
SCIP Number	**Cc71a744-5621-4411-9c01-0b5589085e26**
EU RoHS Directive	**Compliant By Exemption**
REACh Regulation	**Reference contains Substances of Very High Concern above the threshold**
California proposition 65	**WARNING: This product can expose you to chemicals including: Phenyl glycidyl ether, which is known to the State of California to cause cancer and birth defects or other reproductive harm. For more information go to www.P65Warnings.ca.gov**
PVC free	**Yes**

Use Longer

Lifetime extension

Repair	**No**

Use Again

Repack and remanufacture

Take-back	**No**
WEEE Label	**The product must be disposed on European Union markets following specific waste collection and never end up in rubbish bins.**

Technical Illustration

Dimensions

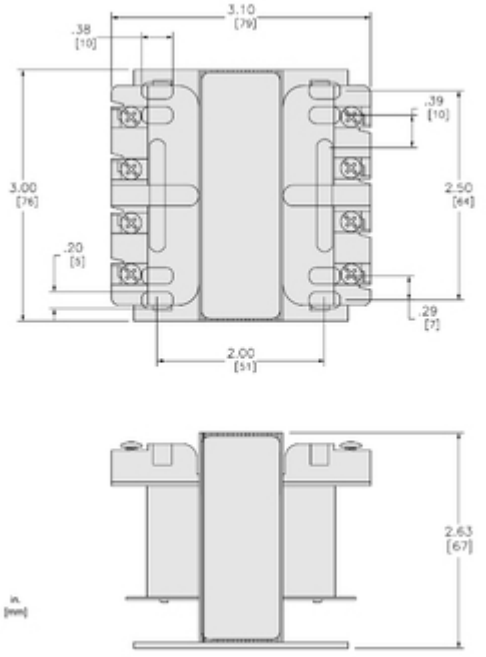

Technical Illustration

Wiring diagram

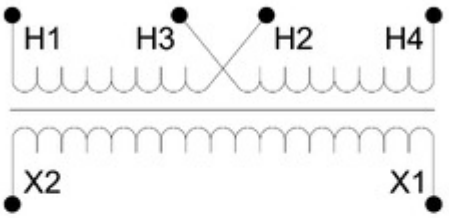

Options

Voltage Code	Voltages		Connections	
	Primary	Secondary	Primary	Secondary
D1	220 x 440 230 x 460 240 x 480	110 115 120	220/230/240 V: Connect to H1 and H4 Jumper H1 and H3 Jumper H2 with H4 440/460/480 V: Connect to H1 and H4 Jumper H2 with H3	Connect to X1 and X2

REFER TO TECHNICAL DOCUMENTATION FOR COMPLETE INFORMATION