Product data sheet

Specifications



Automatic switch, PowerPacT J, 225A, 3 pole, 600VAC, 18kA, lugs, magnetic

JGM36000S25

Product availability: Stock - Normally stocked in distribution facility

Main

Product or Component Type	Automatic switch
Range of Product	PowerPact J
Trip unit technology	Magnetic

Complementary

Line Rated Current	250 A
[Ue] rated operational voltage	600 V AC 250 V DC
Mounting Mode	Unit mount
Poles description	3P
Short-circuit withstand	65 kA 240 V UL 489 35 kA 480 V UL 489 18 kA 600 V UL 489
Breaking capacity code	G
Electrical connection	Lugs, line Terminal nut, load
AWG gauge	x AWG 3/0...350 kcmil (aluminium/copper)
Terminal identifier	AL250JD
Magnetic tripping current	3125 A
Height	7.52 in (191.008 mm)
Width	4.12 in (104.65 mm)
Depth	5 in (127 mm)
Tightening torque	230.1 lbf.in (26 N.m) 0.1…0.3 in² (95…185 mm²) (AWG 3/0...350 kcmil)

Environment

Product Certifications	CE CCC NMX UL Listed CSA IEC

Ordering and shipping details

Category	US10DE201115
Discount Schedule	0DE2
GTIN	785901865018
Returnability	Yes

Price is “List Price” and may be subject to a trade discount – check with your local distributor or retailer for actual price.

Disclaimer: This documentation is not intended as a substitute for and is not to be used for determining suitability or reliability of these products for specific user applications

Country of origin	US

Packing Units

Unit Type of Package 1	PCE
Nbr. of units in pkg.	1
Package 1 Height	5.125 in (13.018 cm)
Package 1 Width	7.250 in (18.415 cm)
Package 1 Length	8.438 in (21.433 cm)
Package weight(Lbs)	5.00009 lb(US) (2.268 kg)

Contractual warranty

Warranty (in months)	18

Environmental Data

Schneider Electric aims to achieve Net Zero status by 2050 through supply chain partnerships, lower impact materials, and circularity via our ongoing “Use Better, Use Longer, Use Again” campaign to extend product lifetimes and recyclability.

Environmental Data explained >

How we assess product sustainability >

Environmental footprint

Total lifecycle Carbon footprint	**551 kg CO2 eq.**
Carbon footprint of the manufacturing phase [A1 to A3]	**13 kg CO2 eq.**
Carbon footprint of the distribution phase [A4]	**0.7 kg CO2 eq.**
Carbon footprint of the installation phase [A5]	**0 kg CO2 eq.**
Carbon footprint of the use phase [B2, B3, B4, B6]	**533 kg CO2 eq.**
Carbon footprint of the end-of-life phase [C1 to C4]	**4 kg CO2 eq.**
Environmental Disclosure	**Product Environmental Profile**

Use Better

Materials and Substances

Packaging made with recycled cardboard	**Yes**
Packaging without single use plastic	**No**
SCIP Number	**9e801cfe-7ff5-4253-9b99-3a0a35e3dbfa**
EU RoHS Directive	**Compliant By Exemption**
REACh Regulation	**Reference contains Substances of Very High Concern above the threshold**
California proposition 65	**WARNING: This product can expose you to chemicals including: DINP, which is known to the State of California to cause cancer, and DIDP, which is known to the State of California to cause birth defects or other reproductive harm. For more information go to www.P65Warnings.ca.gov**
PVC free	**Yes**

Use Longer

Lifetime extension

Repair	**No**

Use Again

Repack and remanufacture

Recyclability potential, in %	**51**
Circularity Profile	**End of Life Information**
Take-back	**No**

Technical Illustration

Dimensions

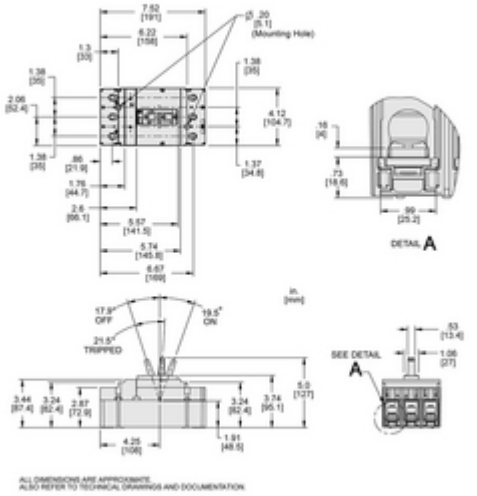

Image of product / Alternate images

Alternative





