

Dimensions

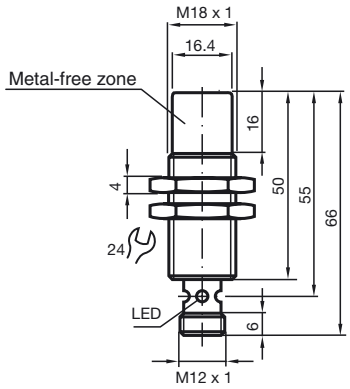

Electrical connection

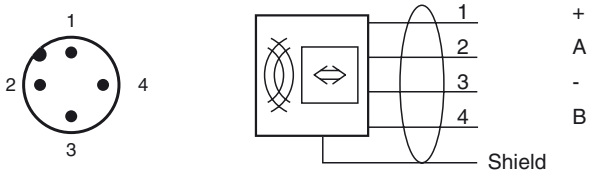

Model Number

IQH1-18GM-V1

HF read/write head, ISO 15693, for IDENT*Control*

Features

- Operating frequency 13.56 MHz
- Conforms to ISO 15693
- Suitable for FRAM transponder
- Read/write head with thread M18 x 1
- Connection via V1 (M12 x 1) plug connection
- Multihole-LED for function display
- Degree of protection IP67

Technical data

General specifications		
Operating frequency		13.56 MHz
Transfer rate		26 kBit/s
Sensing range		
Read distance		0 ... 55 mm
Write distance		0 ... 55 mm
Width		max. 45 mm
UL File Number		E87056 only from low voltage, limited energy source (SELV or PELV) or listed Class 2 source
Indicators/operating means		
LED green/yellow		Multihole-LED: green: power on green flashing: read/write attempt performed yellow: data carrier detected
Electrical specifications		
Power consumption	P_0	≤ 1.2 W
Supply		from the IDENTControl
Ambient conditions		
Ambient temperature		-25 ... 70 °C (-13 ... 158 °F)
Storage temperature		-40 ... 85 °C (-40 ... 185 °F)
Mechanical specifications		
Degree of protection		IP67
Connection		M12 x 1 connector
Material		
Housing		PBT/stainless steel
Encapsulation compound		CY 221/HY 2966
Installation		non-flush
Distance between two heads		Multiplex on: ≥ 30 mm Multiplex off: ≥ 80 mm
Mass		approx. 40 g
Compliance with standards and directives		
Directive conformity		
R&TTE Directive 1995/5/EC		EN 301489-1 V1.8.1 (2008-04), EN 301489-3 V1.4.1 (2002-08), EN 300330-2 V1.3.1 (2006-04), EN 60950-1:2006
Standard conformity		
Electromagnetic compatibility		EN 61000-6-2:2006 , EN 61000-6-4:2007
Degree of protection		EN 60529:2000
RFID		ISO/IEC 15693-2:2006 , ISO/IEC 15693-3:2009 , ISO/IEC 18000-3:2008

Release date: 2015-09-11 08:44 Date of issue: 2015-09-11 204622_eng.xml

Approvals and certificates

FCC approval	This device complies with part 15 of the FCC rules. Operation is subject to the following two conditions: (1) This device may not cause harmful interference, and (2) This device must accept any interference received, including interference that may cause undesired operation. **Caution:** Changes or modifications not expressly approved by the party responsible for compliance could void the user's authority to operate the equipment.
KCC approval	KCC-CRI-PF1-IQH1-18GM-V1

Notes

This equipment has been tested and found to comply with the limits for a Class A digital device, pursuant to part 15 of the FCC Rules. These limits are designed to provide reasonable protection against harmful interference when the equipment is operated in a commercial environment. This equipment generates, uses, and can radiate radio frequency energy and, if not installed and used in accordance with the instruction manual, may cause harmful interference to radio communications. Operation of this equipment in a residential area is likely to cause harmful interference in which case the user will be required to correct the interference at his own expense.

Accessories

IQC21-50P
Data carrier

IQC21-58
Data carrier

IQC22-C5
Data carrier

IQC33-20
Data carrier

IQC33-30
Data carrier

IQC33-50
Data carrier

V1-G-5M-PUR-ABG-V1-W
Connecting cable, M12 to M12, PUR cable 4-pin, shielded

V1-G-10M-PUR-ABG-V1-W
Connecting cable, M12 to M12, PUR cable 4-pin, shielded

IQC24-27-T12
Data carrier

IQC31-22-T9
Data carrier

IQC22-22CT-T9
Data carrier

IQC22-C1 UNPRINTED
Data carrier

IQC21-50PVC
Data carrier

IQC21-F125
Data carrier

IQC33-20CT
Data carrier

Release date: 2015-09-11 08:44 Date of issue: 2015-09-11 204622_eng.xml

Refer to “General Notes Relating to Pepperl+Fuchs Product Information”.
Pepperl+Fuchs Group www.pepperl-fuchs.com
USA: +1 330 486 0001 fa-info@us.pepperl-fuchs.com
Germany: +49 621 776 4411 fa-info@de.pepperl-fuchs.com
Singapore: +65 6779 9091 fa-info@sg.pepperl-fuchs.com
PEPPERL+FUCHS SENSING YOUR NEEDS