Catalog Numbers, Features and Ratings

- 1 PHASE, 3 WIRE, 120/240V ~
- 100K AIC MAX. RATED
  (SEE WIRING DIAGRAM FOR DETAILS)
- MAIN LUG ONLY
- INVERTIBLE
- TYPE N1 INDOOR ENCLOSURE
- ANSI 61 GRAY POWDER COATED ENCLOSURE
  (SEE CHART FOR TRIM/DOOR COLOR)

Catalog Number	ENCLOSURE DIMS L	W	D	Amps Max	Number Spaces	Number Circuits	Bus Bar Material	Bus Bar Plating	Percent Neutrals	Trim Color
S2424L1125	24.00	14.25	3.88	125	24	24	Aluminum	Tin Plated	75%	Gray
S2424L1125G	24.00	14.25	3.88	125	24	24	Aluminum	Tin Plated	100%	Gray
S2424L1125W	24.00	14.25	3.88	125	24	24	Aluminum	Tin Plated	75%	White
S2440L1125	24.00	14.25	3.88	125	24	40	Aluminum	Tin Plated	100%	Gray
S2440L1200	30.00	14.25	3.88	200	24	40	Aluminum	Tin Plated	100%	Gray

S2424L1125
S2424L1125W

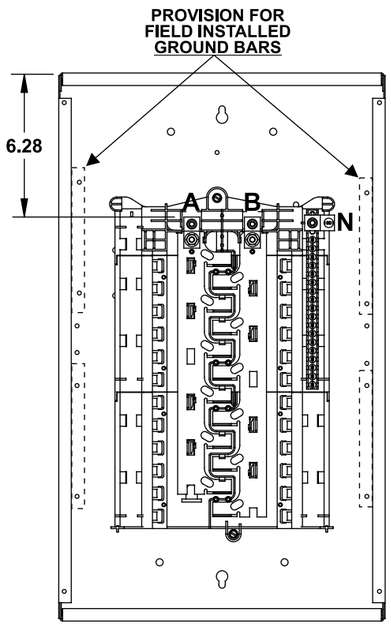

S2424L1125G

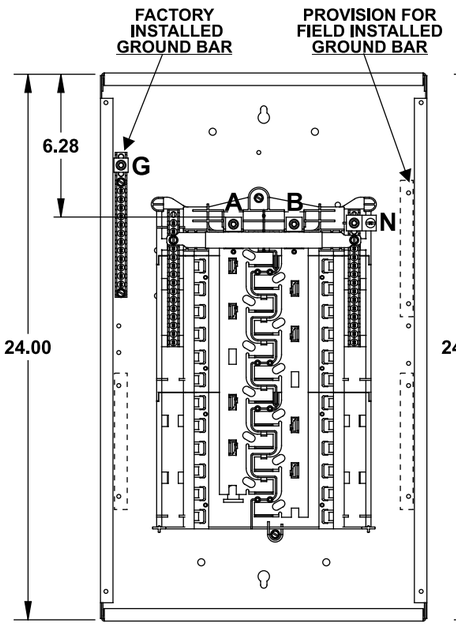

S2440L1125

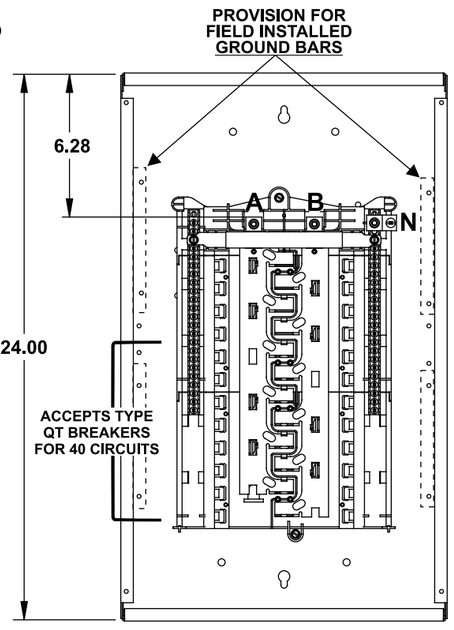

S2440L1200

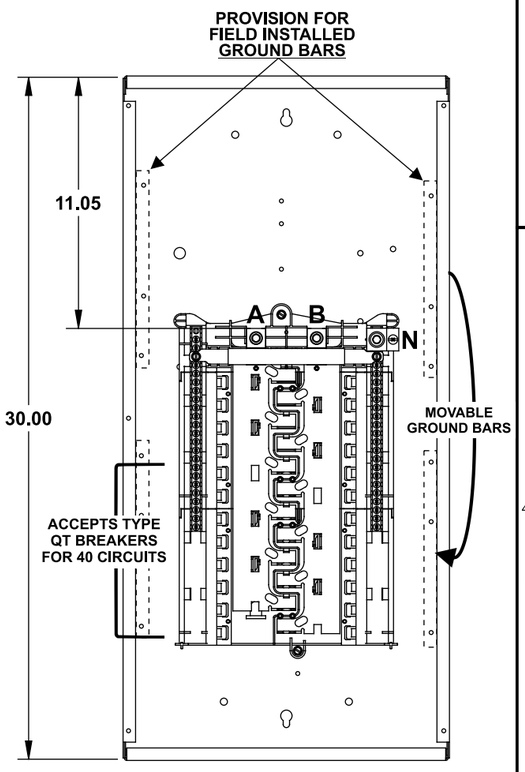

Trim/Door Detail

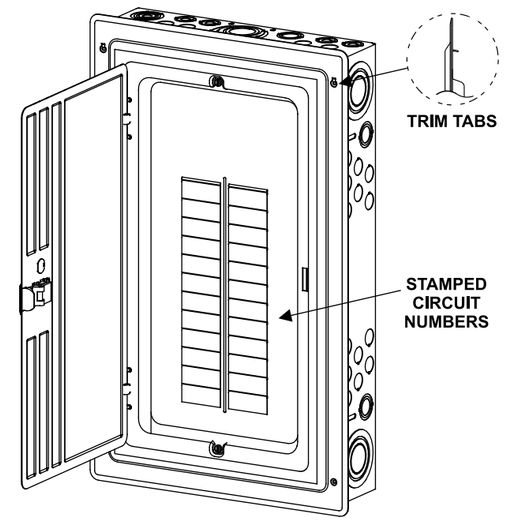

KO Diagram

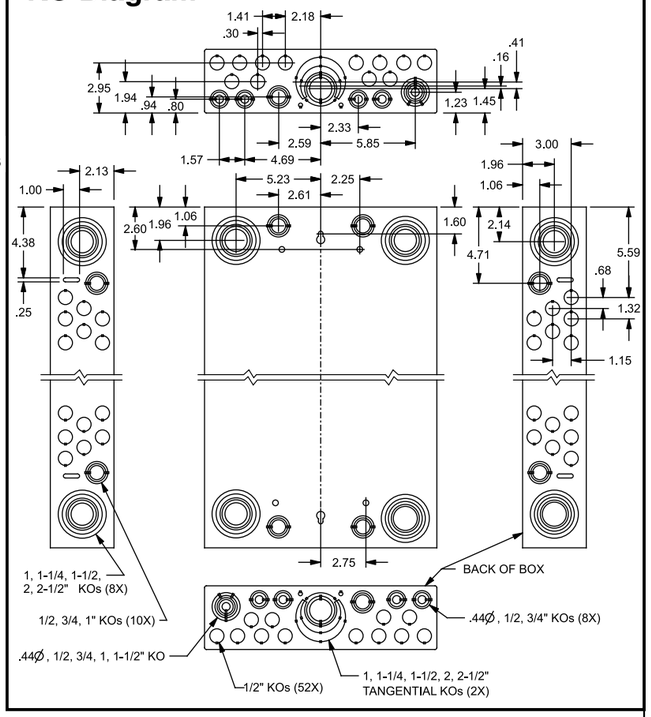

TERMINAL WIRE SIZES AND TORQUES

S2424L1125, S2424L1125G S2424L1125W, S2440L1125

USE COPPER OR ALUMINUM 60°/75°C WIRE
SEE BREAKER MARKINGS FOR WIRE SIZE AND TORQUE REQUIREMENTS

TERMINALS	WIRE	TORQUE
A, B, N, G	2/0-4 AWG	110 LB-INS
NEUTRAL/GROUND BARS (USE TYPE EC2GB or EC3GB GND BAR KIT ACCESSORY)	10-14 CU/10-12 AL 8 AWG 6-4 AWG	20 LB-INS 25 LB-INS 35 LB-INS
GROUND CONDUCTORS ONLY	(2)or(3) 14 AWG (2) 12-10 AWG	20 LB-INS 20 LB-INS
ECLK1-2 NEUTRAL LUG KIT ECLK2 NEUTRAL LUG KIT	2/0-4 AWG 2/0-4 AWG	45 LB-INS 135 LB-INS
MAIN LUG TO BUS CONNECTION (1/4-20 NUT)		45 LB-INS
BONDING SCREW		45 LB-INS

S2440L1200

USE COPPER OR ALUMINUM 60°/75°C WIRE
SEE BREAKER MARKINGS FOR WIRE SIZE AND TORQUE REQUIREMENTS

TERMINALS	WIRE	TORQUE
A, B, N	300 kcmil - 4 AWG	275 LB-INS
NEUTRAL/GROUND BARS (USE TYPE EC2GB or EC3GB GND BAR KIT ACCESSORY)	10-14 CU/10-12 AL 8 AWG 6-4 AWG	20 LB-INS 25 LB-INS 35 LB-INS
GROUND CONDUCTORS ONLY	(2)or(3) 14 AWG (2) 12-10 AWG	20 LB-INS 20 LB-INS
ECLK1-2 NEUTRAL LUG KIT ECLK2 NEUTRAL LUG KIT ECLK3 NEUTRAL LUG KIT	2/0-4 AWG 2/0-4 AWG 300 kcmil - 1 AWG	45 LB-INS 135 LB-INS 340 LB-INS
MAIN LUG TO BUS CONNECTION (1/4-20 NUT)		45 LB-INS
BONDING SCREW		45 LB-INS

ACCESSORIES

REFER TO WIRING DIAGRAM FOR CORRECT ACCESSORY USAGE

ACCESSORIES DESCRIPTION	CAT. NO.
DOOR LOCK	ECQFL2
FILLER PLATE, 1"	QF3
BREAKER HOLD-DOWN	ECMBR2
BONDABLE GROUND LUG	ECLKB1
SUBFEED LUG KIT	ECLK2125 ECLK2225
100-125 AMP MAIN LUG KIT	ECMLK125
150-225 AMP MAIN LUG KIT	ECMLK225
SURF. MOUNT SPACER KIT	ECSMK1
ARC FLASH LABEL	ECAFL
STANDBY PWR INTERLOCK KITS: ECSBPK01, ECSBPK02, ECSBPK05, ECSBPK06, ECSBPK07	

GROUND BAR KITS DESCRIPTION	CAT. NO.
TYPE EC2GB KIT, 12 SCREWS	EC2GB12
TYPE EC2GB KIT, 12 SCREWS, 2/0 LUG	EC2GB122
TYPE EC2GB KIT, 15 SCREWS	EC2GB15
TYPE EC2GB KIT, 15 SCREWS, 2/0 LUG	EC2GB152
TYPE EC3GB KIT, 21 SCREWS	EC3GB21
TYPE EC3GB KIT, 21 SCREWS, 2/0 LUG	EC3GB212
TYPE EC3GB KIT, 27 SCREWS	EC3GB27
TYPE EC3GB KIT, 27 SCREWS, 2/0 LUG	EC3GB272
TYPE EC3GB KIT, 30 SCREWS	EC3GB30
TYPE EC3GB KIT, 30 SCREWS, 2/0 LUG	EC3GB302
TYPE EC3GB KIT, 35 SCREWS, 2/0 LUG	EC3GB352

© 2013 Copyright Siemens Industry, Inc.

SIEMENS
Siemens Industry, Inc.

ES Series Load Centers™

Description: **1 Phase, Indoor, 24 Position, Main Lug Cut Sheet**

KAM 11/5/13 | DO NOT SCALE DRAWING | Dwg No: **1IN_24_ES_ML**