Liquidtight Flexible Nonmetallic Conduit Connectors

Featuring "Floating Sleeve" Design.

NEC/CEC:
Listed for Ordinary Locations

Illustrated Dimensions

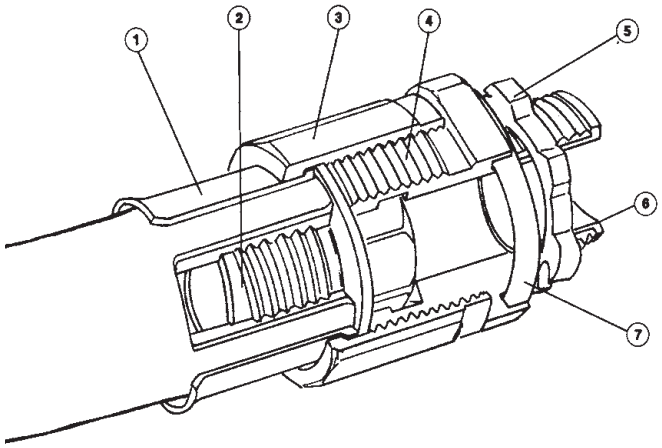

1. Floating sleeve self-aligns to minor conduit variations and protects seal from conduit flexing.
2. Nylon ferrule's deep-biting threads prevent pull-out.
3. Compression nut squeezes conduit tightly between sleeve and ferrule.
4. Connector body prevents conduit from twisting and binding.
5. Locknut bites in for vibration-proof connection.
6. Insulated throat protects conductor insulation.
7. "O" ring forms tight seal to metal surfaces.

Assembly Instructions

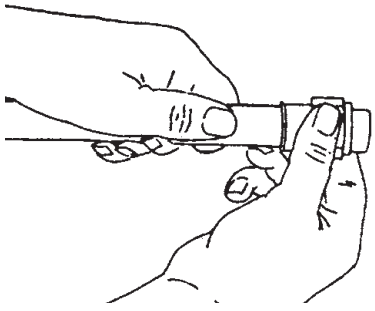

1. Slide compression nut with captive floating sleeve over end of Type A conduit (exposing about one inch of conduit). Sleeve self-aligns to compensate for minor conduit surface irregularities or non-uniform conduit wall thickness. Nut moves freely over sleeve, which doesn't rotate. Nut can't bind...conduit can't twist during assembly or disassembly.

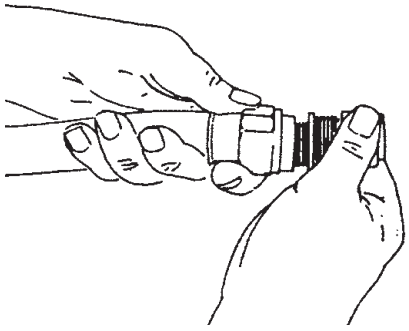

2. Use connector body as "wrench" to thread rugged nylon ferrule into inner wall of conduit. (The octagonal head of the ferrule mates precisely with the matching octagonal recess in the connector body.) The ferrule threads bite deeply into the conduit wall for a positive seal. Provides superior pull-out resistance.

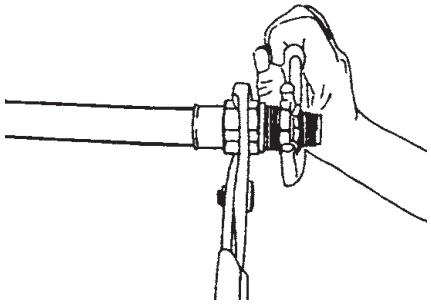

3. Wrench-tighten until nut contacts shoulder on body to complete assembly. This tightly compresses conduit between sleeve and ferrule for a positive liquidtight seal. When tightened, floating sleeve extends beyond compression nut to protect connection from strain of flexing.

© September 2017

Liquidtight STNM™ Type A Flexible Nonmetallic Conduit Connectors

NEC/CEC — Suitable for use in the following Hazardous Locations:
Class I, Division 2 per NEC 501.10(B)(4)
Class I, Zone 2 per NEC 505.15(C)(2)
Class II, Division 1 per NEC 502.10(A)(2)(2)
Class II, Division 2 per NEC 502.10(B)(2)

NEC/CEC — Suitable for use in the following Hazardous Locations:
Class III, Division 1 per NEC 503.10(A)(3)(2)
Class III, Division 2 per NEC 503.10(B)
Intrinsically Safe per NEC 504.20

Applications

- STNM™ connectors with exclusive "floating sleeve" reduces installation time when connecting to Type A nonmetallic flexible conduit.

Features

- Eliminates common connection problems and assures a liquidtight, concretetight seal against oil, water, dirt and chemicals.
- The positive, pull out proof seal formed by a STNM™ connector begins with its deep-threaded ferrule that bites into the inner wall of the conduit.
- The sleeve separates the STNM™ series apart from ordinary connectors. The sleeve is held captive within a compression nut that allows it to move freely and self-align with the conduit having a slightly irregular surface or varying wall thickness.
- The nut rides only on the sleeve and not on the conduit. It cannot bend or twist the conduit, and thereby protects wiring. When fully tightened, the flared sleeve extends beyond the nut, providing additional protection from flexing.
- Ease of assembly and disassembly of STNM™ connectors permits make-up of harnesses in advance for fast, simple connections during production line assemblies.
- Available in straight and 90° styles from 3/8" thru 2". Insulated throats are standard on all connectors. Connectors are furnished with locknut and neoprene "O" ring for a liquidtight seal to JIC boxes.

Standard Material/Finish

- Body: steel
- Compression nut: steel
- Sleeve: steel
- Ferrule: nylon
- Wire mesh: stainless steel
- "O" ring: neoprene

NEC/CEC Certifications and Compliances

- UL Standard: 514B
- UL Listed: E-11853
- CSA Standard: C22.2 No. 18
- CSA Certified: 065178

	Trade Size (Inches)	Dimensions in Millimeters (Inches) A	B	C	D	E	Weight per 100 kg (lb)	Catalog Number
Straight								
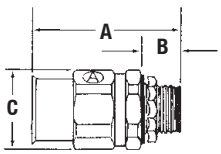	3/8	54.9 (2.16)	15.0 (0.59)	29.5 (1.16)	—	—	10.21 (22.50)	**STNM-38**
	1/2	65.8 (2.59)	15.0 (0.59)	33.3 (1.31)	—	—	14.65 (32.30)	**STNM-50**
	3/4	65.8 (2.59)	15.0 (0.59)	41.4 (1.63)	—	—	20.09 (44.30)	**STNM-75**
	1	73.2 (2.88)	18.3 (0.72)	49.3 (1.94)	—	—	29.03 (64.00)	**STNM-100**
	1-1/4	86.6 (3.41)	19.1 (0.75)	61.2 (2.41)	—	—	53.98 (119.00)	**STNM-125**
	1-1/2	87.4 (3.44)	19.1 (0.75)	70.6 (2.78)	—	—	23.04 (50.80)	**STNM-150**
	2	100.8 (3.97)	19.1 (0.75)	85.9 (3.38)	—	—	107.50 (237.00)	**STNM-200**
90°								
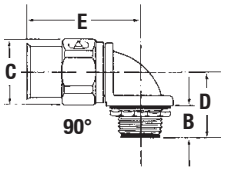	3/8	-	15.0 (0.59)	29.5 (1.16)	31.8 (1.25)	51.6 (2.03)	13.52 (29.80)	**STNM-9038**
	1/2	-	15.0 (0.59)	33.3 (1.31)	32.5 (1.28)	60.5 (2.38)	17.24 (38.00)	**STNM-9050**
	3/4	-	15.0 (0.59)	41.4 (1.63)	36.6 (1.44)	63.5 (2.50)	24.72 (54.50)	**STNM-9075**
	1	-	18.3 (0.72)	49.3 (1.94)	44.5 (1.75)	69.9 (2.75)	36.74 (81.00)	**STNM-90100**
	1-1/4	-	19.1 (0.75)	61.2 (2.41)	50.0 (1.97)	88.1 (3.47)	69.40 (153.00)	**STNM-90125**
	1-1/2	-	19.1 (0.75)	70.6 (2.78)	57.2 (2.25)	91.2 (3.59)	91.31 (201.30)	**STNM-90150**
	2	-	19.1 (0.75)	85.9 (3.38)	64.3 (2.53)	112.0 (4.41)	141.52 (312.00)	**STNM-90200**
Wire Mesh Strain Relief								
The STNM-SR Series with cap can be substituted for any related trade size STNM™ Series cap to convert it to a connector with a wire mesh strain relief.								
	3/8	—	—	—	—	—	2.45 (5.40)	**STNM-SR38**
	1/2	—	—	—	—	—	5.31 (11.70)	**STNM-SR50**
	3/4	—	—	—	—	—	7.30 (16.10)	**STNM-SR75**
	1	—	—	—	—	—	8.48 (18.70)	**STNM-SR100**
	1-1/4	—	—	—	—	—	9.71 (21.40)	**STNM-SR125**
	1-1/2	—	—	—	—	—	12.11 (26.70)	**STNM-SR150**
	2	—	—	—	—	—	14.56 (32.10)	**STNM-SR200**

© September 2017