This document was generated on 03/21/2017

PLEASE CHECK WWW.MOLEX.COM FOR LATEST PART INFORMATION

Part Number: 1300150143
Status: Active
Overview: Brad® Mini-Change® Connectors
Description: Mini-Change® C-Size Receptacle with Leads 1/2" - 14 NPT Threads, Male (Straight) 9 Poles, 1.83m (6.0') Length

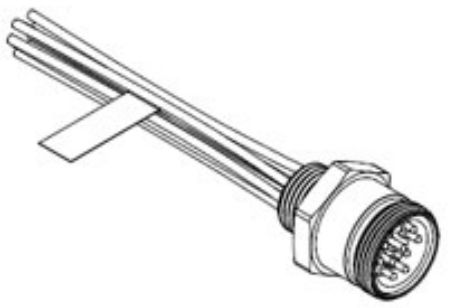

Series image - Reference only

Documents:
Drawing (PDF)
RoHS Certificate of Compliance (PDF)

Agency Certification

CSA	LR6837
UL	E152210

General

Product Family	Industrial Receptacles
Series	130015
Comments	C-Size (1-1/8" - 16 UN-2A)
IP Rating	IP67
Overview	Brad® Mini-Change® Connectors
Product Name	Mini-Change®
Type	Single Ended (pigtail)
UPC	78678844212

Physical

Coupling Type	External Thread
Gender	Male
Keyway	Single
Length	1.83m
Material - Component	Zinc Die-Cast with Black Epoxy
Mounting Thread Size	1/2" - 14 NPT
Orientation	Straight
Panel Mount	N/A
Poles	9
Temperature Range - Operating	-20°C to +105°C
Wire Size AWG	16
Wire/Cable Type	UL 1015

Electrical

Current - Maximum per Contact	7.0A
Voltage - Maximum	600V AC/DC

Material Info

Engineering Number	3R9006A20F060

Reference - Drawing Numbers

Sales Drawing	SD-130015-003, SD-130015-027

EU ELV
Not Relevant

EU RoHS **China RoHS**
Not Reviewed
REACH SVHC
Not Reviewed
Halogen-Free Status
Not Reviewed

Need more information on product environmental compliance?

Email productcompliance@molex.com
Please visit the Contact Us section for any non-product compliance questions.

China ROHS	Not Reviewed
ELV	Not Relevant
RoHS Phthalates	Not Reviewed

Search Parts in this Series
130015 Series

This document was generated on 03/21/2017

PLEASE CHECK WWW.MOLEX.COM FOR LATEST PART INFORMATION