This document was generated on 03/21/2017

PLEASE CHECK WWW.MOLEX.COM FOR LATEST PART INFORMATION

Part Number: 1300130149

Status: Active

Overview: Brad® Mini-Change® Connectors

Description: Mini-Change® A-Size Receptacle, 3 Poles, 1/2" NPT Threads, Female (Straight) to 16 AWG Leads, 1.83m (6.0') Length

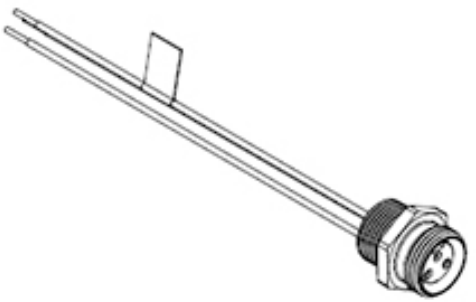

Series image - Reference only

Documents:

Drawing (PDF)

RoHS Certificate of Compliance (PDF)

Agency Certification

CSA	LR6837
UL	E152210

General

Product Family	Industrial Receptacles
Series	130013
IP Rating	IP67
NEMA Rating	NEMA 6
Overview	Brad® Mini-Change® Connectors
Product Name	Mini-Change®
Type	Single Ended (pigtail)
UPC	78678837204

Physical

Coupling Type	External Thread
Gender	Female
Keyway	Single
Length	1.83m
Material - Component	PVC
Mounting Thread Size	1/2" NPT
Orientation	Straight
Panel Mount	Front
Poles	3
Temperature Range - Operating	-20°C to +105°C
Wire Size AWG	16
Wire/Cable Type	UL 1015

Electrical

Current - Maximum per Contact	13.0A
Voltage - Maximum	600V

Material Info

Engineering Number	1R3004A20F0601

Reference - Drawing Numbers

Sales Drawing	SD-130013-041

EU ELV
Not Relevant

EU RoHS **China RoHS**
Not Reviewed

REACH SVHC
Not Reviewed

Halogen-Free Status
Not Reviewed

Need more information on product environmental compliance?

Email productcompliance@molex.com
Please visit the Contact Us section for any non-product compliance questions.

China ROHS	Not Reviewed
ELV	Not Relevant
RoHS Phthalates	Not Reviewed

Search Parts in this Series
130013 Series

This document was generated on 03/21/2017

PLEASE CHECK WWW.MOLEX.COM FOR LATEST PART INFORMATION