This document was generated on 04/19/2017

PLEASE CHECK WWW.MOLEX.COM FOR LATEST PART INFORMATION

Part Number: 1200900032

Status: Active

Overview: Brad® Nano-Change® (M8) Products

Description: Nano-Change® (M8) Receptacle, 4 Poles, M8 x 0.5 Mounting Threads, Male (Straight) to 22 AWG Leads, 0.30m (11.81") Length

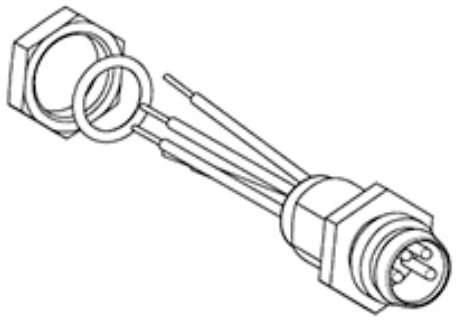

Series image - Reference only

Documents:

Drawing (PDF)

RoHS Certificate of Compliance (PDF)

Agency Certification

CSA	LR6837
UL	E152210

General

Product Family	Industrial Receptacles
Series	120090
IP Rating	IP67
NEMA Rating	NEMA 6
Overview	Brad® Nano-Change® (M8) Products
Product Name	Nano-Change® (M8)
Type	Single Ended (pigtail)
UPC	78678833057

Physical

Coupling Type	External Thread
Gender	Male
Keyway	None
Length	0.30m
Material - Component	Nickel-plated Brass
Mounting Thread Size	M8 x 0.5
Net Weight	9.071/g
Orientation	Straight
Panel Mount	N/A
Poles	4
Temperature Range - Operating	-20°C to +105°C
Wire Size AWG	24
Wire/Cable Type	N/A

Electrical

Current - Maximum per Contact	4.0A
Voltage - Maximum	60V AC / 75V DC

Material Info

Engineering Number	4R4P06A27C300

Reference - Drawing Numbers

Sales Drawing	SD-120090-040

EU ELV
Not Relevant

EU RoHS
Compliant with Exemption 6(c)

China RoHS

REACH SVHC
Not Contained Per -ED/01/2017 (12 January 2017)

Halogen-Free Status
Not Low-Halogen

Need more information on product environmental compliance?

Email productcompliance@molex.com
Please visit the Contact Us section for any non-product compliance questions.

China ROHS	50 Image
ELV	Not Relevant
RoHS Phthalates	Not Contained

Search Parts in this Series
120090 Series

This document was generated on 04/19/2017

PLEASE CHECK WWW.MOLEX.COM FOR LATEST PART INFORMATION