This document was generated on 05/18/2017

PLEASE CHECK WWW.MOLEX.COM FOR LATEST PART INFORMATION

Part Number: 1200740241
Status: Active
Overview: Brad® Micro-Change® Connectors
Description: Micro-Change® (1/2" - 20 UNF) US Dual Keyway Receptacle, 6 Poles, 1/4" - 18 NPT Mounting Threads, Male (Straight) to 22 AWG PVC Leads, 0.305m (1.0') Length

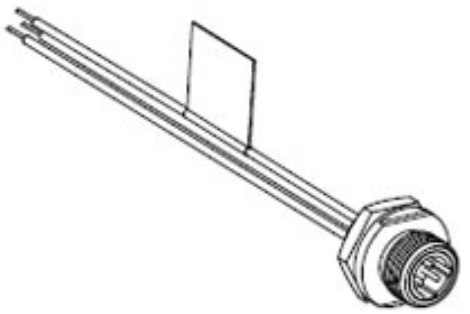

Series image - Reference only

Documents:
Drawing (PDF)
RoHS Certificate of Compliance (PDF)

Agency Certification

CSA	LR6837
UL	E152210

General

Product Family	Industrial Receptacles
Series	120074
IP Rating	IP67
NEMA Rating	NEMA 6
Overview	Brad® Micro-Change® Connectors
Product Name	Micro-Change® (1/2" - 20 UNF)
Type	Single Ended (pigtail)
UPC	78678821757

Physical

Coupling Type	External Thread
Gender	Male
Keyway	Dual
Length	0.305m
Material - Component	Gray Annodized Aluminum
Mounting Thread Size	1/4" - 18 NPT
Orientation	Straight
Panel Mount	Front
Poles	6
Temperature Range - Operating	-20°C to +80°C
Wire Size AWG	22
Wire/Cable Type	Leads, UL 1061

Electrical

Current - Maximum per Contact	4.0A
Voltage - Maximum	250V AC/DC

Material Info

Engineering Number	7R6A06A19A120

Reference - Drawing Numbers

Sales Drawing	SD-120074-030

EU ELV
Not Relevant

EU RoHS **China RoHS**
Not Reviewed
REACH SVHC
Not Reviewed
Halogen-Free Status
Not Reviewed

Need more information on product environmental compliance?

Email productcompliance@molex.com
Please visit the Contact Us section for any non-product compliance questions.

China ROHS	Not Reviewed
ELV	Not Relevant
RoHS Phthalates	Not Reviewed

Search Parts in this Series
120074 Series

This document was generated on 05/18/2017

PLEASE CHECK WWW.MOLEX.COM FOR LATEST PART INFORMATION