FFLED39/PC



Rectangular shaped LED floodlight designed to replace 150W Metal Halide. Patent Pending airflow technology ensures long LED and driver lifespan. Use for building facade lighting, sign lighting, LED landscape lighting and instant-on security lighting.

Color: Bronze

Weight: 12.5 lbs

Project:	Type:
Prepared By:	Date:

Driver Info

Type:	Constant Current
120V:	0.35A
208V:	N/A
240V:	N/A
277V:	N/A
Input Watts:	41W
Efficiency:	95%

LED Info

Watts:	39W
Color Temp:	5000K (Cool)
Color Accuracy:	65 CRI
L70 Lifespan:	100,000
Lumens:	4,596
Efficacy:	112 LPW

Copyright © 2014 RAB Lighting Inc. All Rights Reserved Note: Specifications are subject to change at any time without notice

Technical Specifications

Other

FFLED39 with Photocell:

120V Button Photocell Included. Photocell is only compatible with 120V.

Equivalency:

The FFLED39 is Equivalent in delivered lumens to a 150W Metal Halide.

California Title 24:

Select an FFLED39 model equipped with 0-10V driver (look for /D10 in the catalog #) for a 2013 California Title 24 compliant model.

Warranty:

RAB warrants that our LED products will be free from defects in materials and workmanship for a period of five (5) years from the date of delivery to the end user, including coverage of light output, color stability, driver performance and fixture finish.

Patents:

The FFLED design is protected by U.S. Pat. D643,147, Canada Pat. 140798, China Pat. ZL201130171304.1, Mexico Pat. 36757 and pending patent in Taiwan.

Listings

UL Listing:

Suitable For Wet Locations. Suitable for ground mounting.

IESNA LM-79 & LM-80 Testing:

RAB LED luminaires have been tested by an independent laboratory in accordance with IESNA LM-79 and LM-80, and have received the Department of Energy "Lighting Facts" label.

DLC Listed:

This product is on the Design Lights Consortium (DLC) Qualified Products List and is eligible for rebates from DLC Member Utilities.

Optical

Lumen Maintenance:

100,000-hour LED lifespan based on IES LM-80 results and TM-21 calculations.

NEMA Type:

NEMA Beam Spread of 7H x 6V

Construction

IP Rating:

Ingress Protection rating of IP65 for dust and water.

Ambient Temperature:

Suitable for use in 40°C ambient temperatures.

Cold Weather Starting:

The minimum starting temperature is -40°F/-40°C.

Thermal Management Housing:

Superior heat sinking with external Air-Flow fins.

Mounting:

Heavy-duty mounting arm with O ring seal & stainless steel screw.

Effective Projected Area:

EPA = 0.65

Reflector:

Specular vacuum-metallized polycarbonate

Gaskets:

High-temperature silicone gaskets.

Finish:

Our environmentally friendly polyester powder coatings are formulated for high-durability and long-lasting color, and contains no VOC or toxic heavy metals.

Green Technology:

Mercury and UV free.

Threaded Size:

1/2" threaded arm.

LED Characteristics

LEDs:

Two multi-chip, 26Watt high performance LEDs.

Color Consistency:

7-step MacAdam Ellipse binning to achieve consistent fixture-to-fixture color.

Color Stability:

LED color temperature is warrantied to shift no more than 200K in CCT over a 5 year period.

Color Uniformity:

RAB's range of CCT (Correlated Color Temperature) follows the guidelines of the American National Standard for (SSL) Products, ANSI C78.377-2015.

Electrical

Driver:

Constant Current, Class 2, 1050mA, 100-277V, 50/60Hz, 0.6A, Power Factor 99%

Technical Specifications (continued)

Electrical

THD:

7.7% at 120V, 6.8% at 277V

Surge Protection:

4kV

Copyright © 2014 RAB Lighting Inc. All Rights Reserved Note: Specifications are subject to change at any time without notice

FFLED39/PC

Dimensions

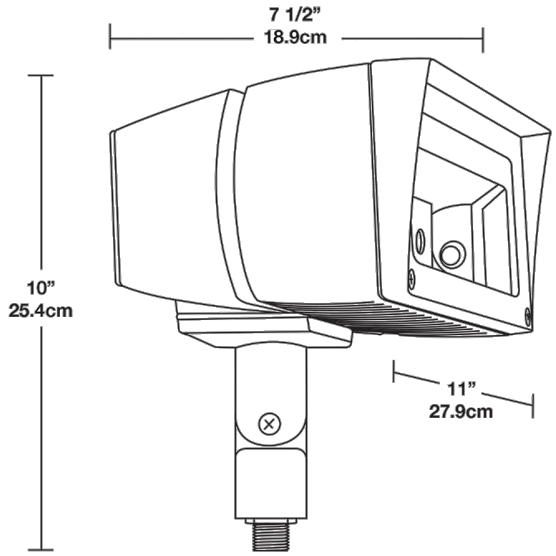

Features

- Ultra efficient LED and optical design
- Replaces 150W MH floodlights
- 100,000 hour life based on LM-80 tests
- Air-flow technology heatsink
- 5-year warranty

Ordering Matrix

Family	Watts	Mount	Color Temp	Beam Spread	Finish	Dimming	Voltage	Photocell
FFLED								
	39 = 39W	= Arm **T** = Trunnion **SF** = Slipfitter	= Cool **Y** = Warm **N** = Neutral	= 7H x 6V **B44** = 4H x 4V **B55** = 5H x 5V	= Bronze **W** = White	= No Dimming **/D10** = Dimmable	= 120-277V **/480** = 480 Volt	= No Photocell **/PC** = 120V Button **/PC2** = 277V Button **/PCS** = 120V Swivel **/PCS2** = 277V Swivel

Copyright © 2014 RAB Lighting Inc. All Rights Reserved Note: Specifications are subject to change at any time without notice