

# Twistline GU10

## BC50TWISTLINE GU10/FL25 TP

Bright, white accent light with superior energy savingsPhilips Twistline GU10 Philips Halogen Twistline MR16 with GU10 base provide bright white accent light. The twist and lock base enables easy installation and a secure fit. Suited for track and recessed lighting applications.

### Product data

| General Information | |
|---|---|
| **Cap-Base** | GU10 [ GU10] |
| **Bulb Shape** | MR16 [ 2inch/50mm] |
| **Operating Position** | UNIVERSAL [ Any or Universal (U)] |
| **Nominal Lifetime (Nom)** | 2000 h |

| Light Technical | |
|---|---|
| **Beam Angle (Nom)** | 25 ° |
| **Luminous Intensity (Max)** | 700 cd |
| **Correlated Color Temperature (Nom)** | 2800 K |
| **Color Rendering Index (Nom)** | 100 |

| Operating and Electrical | |
|---|---|
| **Power (Rated) (Nom)** | 50 W |
| **Starting Time (Nom)** | 0.0 s |
| **Voltage (Nom)** | 120 V |

| Controls and Dimming | |
|---|---|
| **Dimmable** | Yes |

| Mechanical and Housing | |
|---|---|
| **Bulb Finish** | Clear |

| Approval and Application | |
|---|---|
| **Energy Efficiency Label (EEL)** | - |

| Product Data | |
|---|---|
| **Order product name** | BC50TWISTLINE GU10/FL25 TP |
| **EAN/UPC - Product** | 046677415747 |
| **Order code** | 925691836307 |
| **Numerator - Quantity Per Pack** | 1 |
| **Numerator - Packs per outer box** | 6 |
| **Material Nr. (12NC)** | 925691836307 |
| **Net Weight (Piece)** | 0.046 kg |

# Twistline GU10

## Dimensional drawing

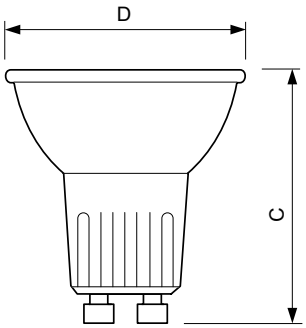


TWIST 50W GU10 120V 25D

| Product | D | C |
|---|---|---|
| BC50TWISTLINE GU10/FL25 TP | 51 mm | 53 mm |

© 2016 Philips Lighting Holding B.V. All rights reserved. Philips Lighting reserves the right to make changes in specifications and/or to discontinue any product at any timewithout notice or obligation and will not be liable for any consequences resulting from the use of this publication.