PIP20/D10



This low-cost, all-purpose floodlight is available in 15, 20 and 30 Watt versions and delivers up to 4200 lumens. Optional photocell is available.

Color: Bronze

Weight: 3.7 lbs

Project:	**Type:**
Prepared By:	**Date:**

Driver Info

Type	Constant Current
120V	0.16A
208V	0.10A
240V	0.09A
277V	0.08A
Input Watts	19.8W

LED Info

Watts	20W
Color Temp	5000K (Cool)
Color Accuracy	77 CRI
L70 Lifespan	60,000 Hours
Lumens	2,728
Efficacy	137.8 lm/W

Technical Specifications

Listings

UL Listed:

Suitable for wet locations

IESNA LM-79 & LM-80 Testing:

RAB LED luminaires and LED components have been tested by an independent laboratory in accordance with IESNA LM-79 and LM-80.

DLC Listed:

This product is on the Design Lights Consortium (DLC) Qualified Products List and is eligible for rebates from DLC Member Utilities. DLC Product Code: P14R4D79

Electrical

Driver:

Constant Current, Class 2, 50/60 Hz, 2kV, 120 - 277VAC 120: 0.16A, 208V: 0.10A, 240V: 0.09A, 277V: 0.08A

Dimming Driver:

Driver includes dimming control wiring for 0-10V dimming systems. Requires separate 0-10V DC dimming circuit. Dims down to 10%.

THD:

12.8% at 120V, 14.1% at 277V

Power Factor:

99% at 120V, 95.4% at 277V

Note:

All values are typical (tolerance +/- 10%)

LED Characteristics

LEDs:

Long-life, high-efficacy, surface-mount LEDs

Color Uniformity:

RAB's range of Correlated Color Temperature follows the guidelines of the American National Standard for Specifications for the Chromaticity of Solid State Lighting (SSL) Products, ANSI C78.377-2017.

Performance

Lifespan:

60,000-Hour LED lifespan based on IES LM-80 results and TM-21 calculations

Optical

NEMA Type:

7H x 6V Beam Spread

Construction

IP Rating:

Ingress Protection rating of IP66 for dust and water

Maximum Ambient Temperature:

Suitable for use in up to 40°C (104°F)

Copyright © 2020 RAB Lighting All Rights Reserved Note: Specifications are subject to change at any time without notice

Technical Specifications (continued)

Construction

Cold Weather Starting:

Minimum starting temperature is -40°C (-40°F)

Housing:

Precision die-cast aluminum housing and mounting arm

Lens:

Frosted acrylic

Mounting:

Mounting arm with "O" ring seal, wire seal plug and stainless steel screw

Gaskets:

High-temperature silicone gaskets

Green Technology:

Mercury and UV free. RoHS-compliant components.

Finish:

Formulated for high durability and long-lasting color

Other

Equivalency:

Equivalent to 70W Metal Halide

5 Yr Limited Warranty:

The RAB 5-year, limited warranty covers light output, driver performance and paint finish. RAB's warranty is subject to all terms and conditions found at rablighting.com/warranty.

Buy American Act Compliance:

RAB values USA manufacturing! Upon request, RAB may be able to manufacture this product to be compliant with the Buy American Act (BAA). Please contact customer service to request a quote for the product to be made BAA compliant.

Dimensions

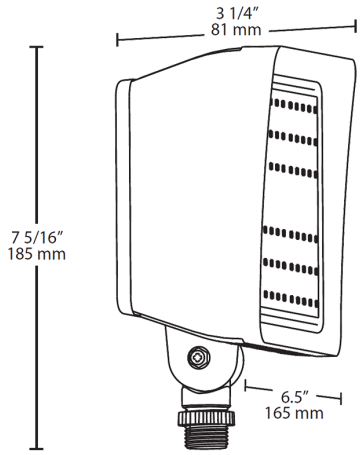

Features

- 60,000-hour LED lifespan
- Standard 0-10V dimming driver
- 5-Year, Limited Warranty

Ordering Matrix

Family	Wattage	Color Temp	Finish	Driver	Sensor Options	Other Options
PIP	20			/D10		
	15 = 15W **20 =** 20W **30 =** 30W **45 =** 45W	**Blank =** 5000K (Cool) **N =** 4000K (Neutral) **Y =** 3000K (Warm)	**Blank =** Bronze **W =** White	**/D10 =** 0-10V Dimming	**Blank =** No Photocell **/PCU =** 120-277V Button Photocell	**USA =** BAA Compliant **Blank =** Standard

Copyright © 2020 RAB Lighting All Rights Reserved Note: Specifications are subject to change at any time without notice