DLED6AR14YY



Now, more is less. Economical retrofit downlights with more to offer. Available in standard or adjustable heads.

Color: White

Weight: 1.0 lbs

Project:	Type:
Prepared By:	**Date:**

Driver Info

Type	Constant Current
120V	0.104A
208V	N/A
240V	N/A
277V	N/A
Input Watts	12.40W

LED Info

Watts	14W
Color Temp	2700K (Residential Warm)
Color Accuracy	89 CRI
L70 Lifespan	50,000 Hours
Lumens	919
Efficacy	74.1 lm/W

Technical Specifications

Listings

UL Classified:

Suitable for damp locations

ENERGY STAR V2.0:

This product is ENERGY STAR® Version 2.0 Certified.

IESNA LM-79 & IESNA LM-80 Testing:

RAB LED luminaires and LED components have been tested by an independent laboratory in accordance with IESNA LM-79 and LM-80.

CEC Status:

Not lawful for sale in California

Electrical

Driver:

Constant Current, Class 2, 50/60 Hz, 120V: 0.104A

THD:

11.8% at 120V

Power Factor:

99.2% at 120V

Dimming:

TRIAC and ELV dimming compatibility. See dimmer compatibility guide here.

Construction

Ambient Temperature:

-20°C to 40°C

Housing:

Precision, die-cast aluminum

Installation:

Torsion springs for secure installation

Socket Adapter:

Edison 26 Medium Base Socket adapter included in box

Lens:

Frosted acrylic lens

Finish:

Chip and fade-resistant polyester powder coat finish

Copyright © 2020 RAB Lighting All Rights Reserved Note: Specifications are subject to change at any time without notice

Technical Specifications (continued)

Construction

Green Technology:

Mercury and UV free. RoHS-compliant components.

LED Characteristics

LEDs:

Multi-chip, high-output, long-life LEDs

Performance

Lifespan:

50,000-Hour LED lifespan based on IES LM-80 results and TM-21 calculations

Optical

Adjustable Range:

38° range

Other

Warranty:

RAB warrants that our LED products will be free from defects in materials and workmanship for a period of five (5) years from the date of delivery to the end user, including coverage of light output, color stability, driver performance and fixture finish. RAB's warranty is subject to all terms and conditions found at rablighting.com/warranty.

Buy American Act Compliance:

RAB values USA manufacturing! Upon request, RAB may be able to manufacture this product to be compliant with the Buy American Act (BAA). Please contact customer service to request a quote for the product to be made BAA compliant.

Dimensions

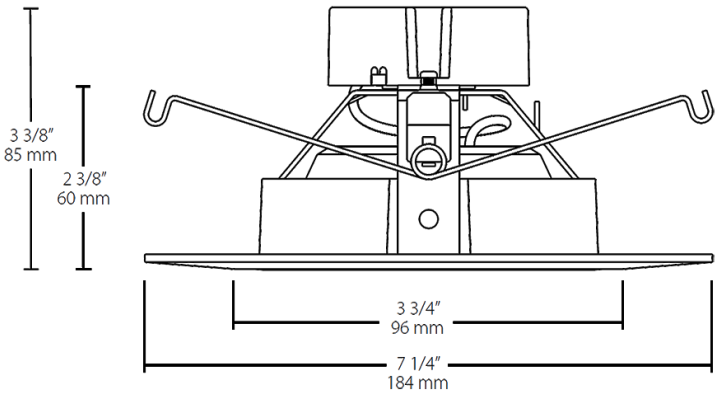

Features

- Superior thermal management with heat-dissipating fins
- Specification-grade 90 CRI standard
- Edison E26 Medium Base socket adapter included
- 5-Year, No-Compromise Warranty

Ordering Matrix

Family	Size	Shape	Wattage	Color Temp
DLED	6	AR	14	YY
	6 = 6" **4** = 4"	**R** = Round **AR** = Adjustable Round	**9** = 9W **11** = 11W **14** = 14W	**YN** = 3500K (Warm Neutral) **Y** = 3000K (Warm) **YY** = 2700K (Residential Warm)

Copyright © 2020 RAB Lighting All Rights Reserved Note: Specifications are subject to change at any time without notice