Surge-Trap® Modular SPD

DIN-rail Style SPD

Surge-Trap® Modular Surge Protective Device (SPD) is a no-fuse, fail-safe surge suppressor featuring Mersen's patented TPMOV® technology inside. The modular SPD is UL 1449 Third Edition approved. It is DIN-rail mountable featuring a fail-safe self-protected design, visual indicator and a small footprint. A remote indicator option provides status to critical control circuitry. The Surge-Trap Modular SPD has a high short circuit rating and a thermally protected MOV, which eliminates the need for additional overcurrent protection devices.



Features/Benefits

- Easy installation or retrofit
- DIN-rail mountable
- Fail-safe, self-protected design
- Remote indicator (optional)
- Visual indicator
- IP20 finger-safe design
- Small footprint
- No additional overcurrent protection devices required

Applications:

- AC/DC distribution
- Power supplies
- Industrial automation
- Telecommunications
- Motor controls and starter systems
- Programmable logic controller (PLC) applications
- Power transfer equipment
- HVAC applications
- AC drives
- UPS systems
- Security systems
- IT/Data centers
- Medical equipment

Ratings:

Max Discharge Current
: 50kA per phase

Volts : 120V to 600V AC
: 600V to 1000V DC (PV only)

SCCR : 200kA

Operating & storage temp
: -40°C to +85°C

Wiring range:
: #6 to #14AWG

Nominal discharge current
: 20kA (most models)

Dimensions

Poles	A in	A mm
1 Pole	0.70	17.8
2 Pole	1.39	35.5
3 Pole	2.10	53.3
4 Pole	2.80	71.0

*** Wire Size: 6-14 AWG*
*** Torque: 15 lbs-in*
*** Use 35mm DIN-rail*

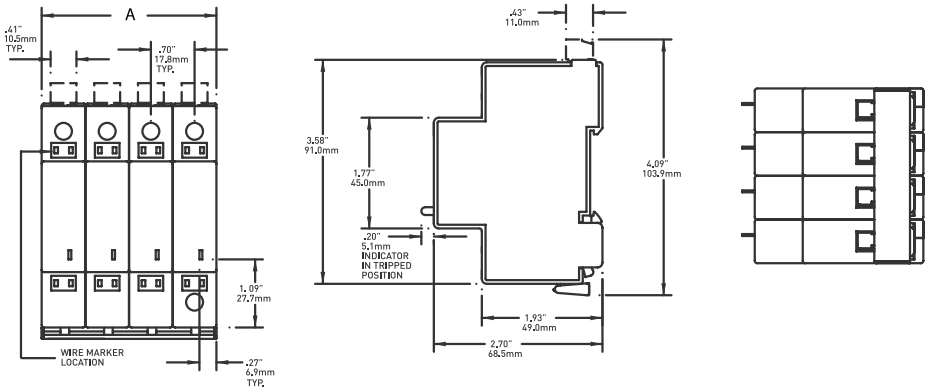

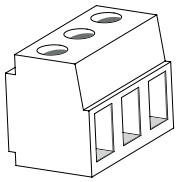



Signal Wire Range: #16 to #30 AWG
- Terminal Torque 2.2 lb-in
- Cont. between Comm + NO = Product Offline, Not Protected
- Cont. between Comm + NC = Product Online, Protected

Approvals:

- UL 1449 Third Edition Approved, File E210793
- Type 4 UL Recognized Component (Tested to UL Type 2 SPD)
- IEC 61643-11
- RoHS Compliant
- ANSI/IEEE C62.41
- CE

Surge-Trap® Modular SPD

Product Type	Voltage	System Type	Mode	Auxiliary Microswitch
ST	480	3PY	G	M
ST- Modular	120	1P - Single Phase	Blank - Includes N-G Mode	Blank - No Microswitch
	120/208	SP - Split Phase	G - Does Not Provide N-G Mode	M - Microswitch Included
	120/240	3PD - 3 Phase Delta		
	240			
	277	3PY - 3 Phase Wye		
	347	PV - Photovoltaic		
	480			
	240/480			
	277/480			
	347/600			
	600			
	1000	Indicates PV only		

Catalog Numbers

Catalog No.	Nominal Voltage (VAC)	MCOV L-G	No. of Poles	System Type	Nominal Discharge Current (I_n, kA)	Max. Discharge Current (I_{max}, 8/20µs, kA)	SCCR (kA)	Freq (Hz)	Voltage Protection Rating (VPR)				No. of Wires	Circuit Connection Wiring Diagrams
									L-N	L-G	N-G	L-L		
ST1201PG(M)	120	180	1	1P	20	50	200	50/60	500	-	-	-	2	A
ST2301PG(M)	240	270	1	1P	20	50	200	50/60	800	-	-	-	2	A
ST2771PG(M)	277	320	1	1P	20	50	200	50/60	900	-	-	-	2	A
ST2083PY(M)	120/208	360	4	3PY	20	50	200	50/60	500	900	500	900	5	D
ST2083PYG(M)	120/208	180	3	3PY	20	50	200	50/60	500	-		900	4	C
ST240SPG(M)	120/240	180	2	SP	20	50	200	50/60	500	-		900	3	B
ST480SPG(M)	240/480	270	2	SP	20	50	200	50/60	800	-	-	1500	3	B
ST2403PDG(M)	240D	270	3	3PD	20	50	200	50/60	-	800	-	1500	4	C
ST4803PY(M)	277/480	500	4	3PY	20	50	200	50/60	1200	2000	700	2000	5	D
ST4803PYG(M)	277/480	320	3	3PY	20	50	200	50/60	900	-	-	1800	4	C
ST4803PDG(M)	480D	550	3	3D	20	50	200	50/60	-	1500	-	3000	4	C
ST6003PY(M)	347/600	690	4	3PY	20	50	200	50/60	1500	2500	800	2500	5	D
ST6003PYG(M)	347/600	420	3	3PY	20	50	200	50/60	1200	-	-	2000	4	C
ST6903PY(M)	400/690	510	4	3PY	20	50	200	50/60	1500	3000	1500	3000	5	D
ST6903PYG(M)	400/690	510	3	3PY	20	50	200	50/60	1500	-	-	3000	4	C

Catalog No. PV	Nominal Operating DC Voltage (V)	U_{cpv}*	Nominal Discharge Current (I_n,8/20, kA)	Imax Discharge Current (I_{max}, 8/20µs, kA)	Voltage Protection Level (Up @ I_n, kV)	I_{scwpv}** (kA)	L/R	Replacement Plug Part No	No. of Poles	Wiring Diagrams
ST600PVM	600	720	20	40	<1.5	10	<= 1mS	-	2	E
ST600YPVM	600	750	20	40	<2.4	10	<= 1mS	-	3	F
ST1000PVM	1000	1250	20	40	<3.0	10	<= 1mS	-	3	F

** Ucpv: Maximum continuous operating DC voltage. **Values based upon SPD type 2 testing*

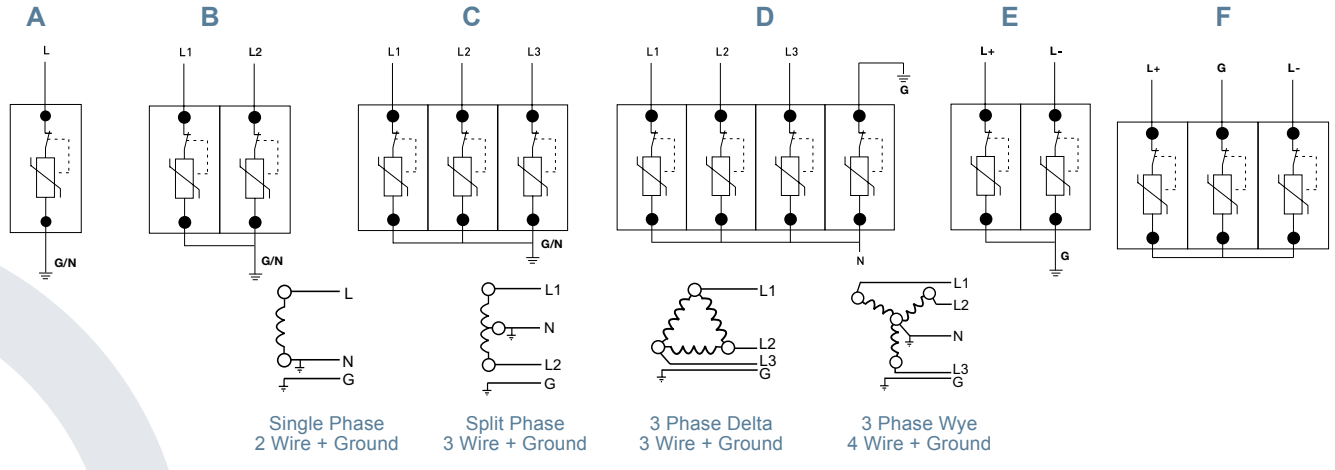

For the most current product performance data visit ep-us.mersen.com and use catalog search.