Product data sheet

Specifications



Panelboard interior, NQ, main lugs, 225A, Al bus, 42 pole spaces, 3 phase, 4 wire, 240VAC, 48VDC

NQ442L2

Product availability: Stock - Normally stocked in distribution facility

Main

Product Type	Interiors
Panelboard Type	Main lugs
Branch Circuit Breaker Type	QOB QOB-VH QHB
Busbar Material	Aluminium

Complementary

Number of spaces	42
Enclosure Nominal Height	38 in (965.2 mm)
Enclosure Nominal Width	20 in (508 mm)
Enclosure Nominal Depth	5.75 in (146.05 mm) NEMA 1 6.5 in (165.1 mm) NEMA 3R/12
Line Rated Current	225 A
[Iu] rated interrupted current	10 kA 22 kA 65 kA
Number of Phases	3 phase 4 wires
Voltage Rating	240 V AC 48 V DC
Connections - terminals	Lug line AWG 6...350 kcmil aluminium Lug neutral AWG 6...350 kcmil aluminium
Tightening torque	40.005…50.007 lbf.in (4.52…5.65 N.m) 0.02…0.10 in² (13.30…67.43 mm²) (AWG 6...AWG 2/0) 100.01 lbf.in (11.3 N.m) 0.02…0.10 in² (13.30…67.43 mm²) (AWG 6...AWG 2/0) 274.99 lbf.in (31.07 N.m) 0.02…0.3 in² (13.30…177.3 mm²) (AWG 6...350 kcmil) 274.99 lbf.in (31.07 N.m) 0.02…0.2 in² (13.30…126.7 mm²) (AWG 6...250 kcmil) 274.99 lbf.in (31.07 N.m) 0.2…0.2 in² (107.2…152 mm²) (AWG 4...300 kcmil)
Height	33.00 in (838.20 mm)
Width	10.44 in (265.18 mm)
Product Weight	17.17 lb(US) (7.79 kg)

Environment

Standards	CSA UL

Ordering and shipping details

Category	US1PE1A09151

Price is “List Price” and may be subject to a trade discount – check with your local distributor or retailer for actual price.

Disclaimer: This documentation is not intended as a substitute for and is not to be used for determining suitability or reliability of these products for specific user applications

Discount Schedule	PE1A
GTIN	785901507864
Returnability	Yes
Country of origin	MX

Packing Units

Unit Type of Package 1	PCE
Nbr. of units in pkg.	1
Package 1 Height	6.500 in (16.510 cm)
Package 1 Width	14.000 in (35.560 cm)
Package 1 Length	38.000 in (96.520 cm)
Package weight(Lbs)	18.550 lb(US) (8.414 kg)
Unit Type of Package 2	PAL
Number of Units in Package 2	18
Package 2 Height	42.000 in (106.680 cm)
Package 2 Width	42.000 in (106.680 cm)
Package 2 Length	48.000 in (121.920 cm)
Package 2 Weight	359.001 lb(US) (162.840 kg)

Contractual warranty

Warranty (in months)	18

Environmental Data

Schneider Electric aims to achieve Net Zero status by 2050 through supply chain partnerships, lower impact materials, and circularity via our ongoing “Use Better, Use Longer, Use Again” campaign to extend product lifetimes and recyclability.

Environmental Data explained >

How we assess product sustainability >

Environmental footprint

Total lifecycle Carbon footprint	**430 kg CO2 eq.**
Carbon footprint of the manufacturing phase [A1 to A3]	**272 kg CO2 eq.**
Carbon footprint of the distribution phase [A4]	**12 kg CO2 eq.**
Carbon footprint of the installation phase [A5]	**2 kg CO2 eq.**
Carbon footprint of the use phase [B2, B3, B4, B6]	**45 kg CO2 eq.**
Carbon footprint of the end-of-life phase [C1 to C4]	**99 kg CO2 eq.**
Environmental Disclosure	**Product Environmental Profile**

Use Better

Materials and Substances

Packaging made with recycled cardboard	**Yes**
Packaging without single use plastic	**No**
EU RoHS Directive	**Compliant**
REACh Regulation	**Free of Substances of Very High Concern above the threshold**
California proposition 65	**WARNING: This product can expose you to chemicals including: Nickel compounds, which is known to the State of California to cause cancer, and Bisphenol A (BPA), which is known to the State of California to cause birth defects or other reproductive harm. For more information go to www.P65Warnings.ca.gov**

Use Longer

Lifetime extension

Repair	**No**

Use Again

Repack and remanufacture

Recyclability potential, in %	**1**
Circularity Profile	**No need of specific recycling operations**
Take-back	**No**

Dimensions Drawings

Approximate Dimensions

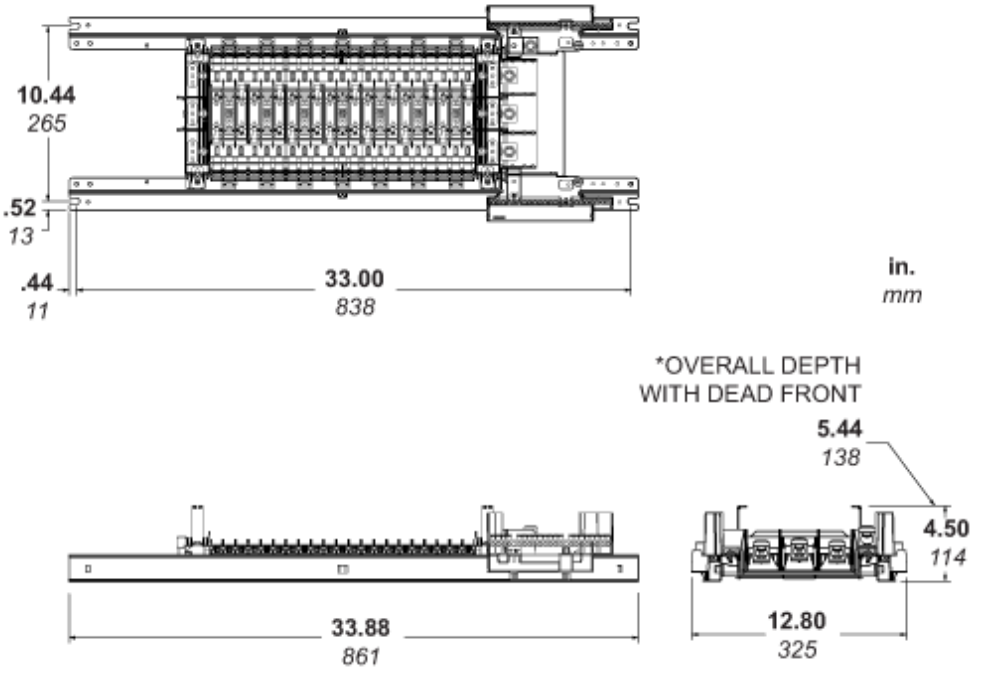

Catalog	Phase/Wire	Bus Thickness	Bus Material	Lug Size
NQ442L2C	3P 4W	.25	CU	#6–350 KCMIL
NQ42L2C	1P 3W	.25	CU	#6–350 KCMIL
NQ442L2	3P 4W	.25	AL	#6–350 KCMIL
NQ42L2	1P 3W	.25	AL	#6–350 KCMIL