Product data sheet

Specifications



Industrial control transformer, Type TF, 1 phase, 1000VA, 240x480V primary, 120V secondary, 50/60Hz

9070TF1000D1

Product availability: Stock - Normally stocked in distribution facility

Main

Product or Component Type	Industrial Control Transformer
Type	TF

Complementary

Number of Phases	1 phase
Power Rating	1000 VA UL 1000 VA CSA 1000 VA NOM 600 VA CE
Primary to Secondary Voltage	240 x 480 V 120 V 230 x 460 V 115 V 220 x 440 V 110 V
Fuse type	0.41 x 1.50 in CC top
Temperature rise	115 °C
Electrical Connection	Screw clamp terminals
Height	5.8 in (147.3 mm)
Width	5.25 in (133.35 mm)
Depth	6.3 in (160.02 mm)
Material	Copper: winding
Fingersafe Cover Compatibility	FSC2

Environment

Product Certifications	UL listed file E61239 CSA file LR37055 guide 184-N-90
Enclosure Type	Not rated (open device)
Insulation temperature	356 °F (180 °C)

Ordering and shipping details

Category	US10CP816203
Discount Schedule	0CP8
GTIN	785901904922
Returnability	Yes
Country of origin	MX

Packing Units

Price is “List Price” and may be subject to a trade discount – check with your local distributor or retailer for actual price.

Disclaimer: This documentation is not intended as a substitute for and is not to be used for determining suitability or reliability of these products for specific user applications

Unit Type of Package 1	PCE
Nbr. of units in pkg.	1
Package 1 Height	5.890 in (14.961 cm)
Package 1 Width	6.300 in (16.002 cm)
Package 1 Length	5.250 in (13.335 cm)
Package weight(Lbs)	21.799 lb(US) (9.888 kg)

Contractual warranty

Warranty (in months)	18

Environmental Data

Schneider Electric aims to achieve Net Zero status by 2050 through supply chain partnerships, lower impact materials, and circularity via our ongoing “Use Better, Use Longer, Use Again” campaign to extend product lifetimes and recyclability.

Environmental Data explained >

How we assess product sustainability >

Environmental footprint

Total lifecycle Carbon footprint	**6 354 kg CO2 eq.**
Carbon footprint of the manufacturing phase [A1 to A3]	**38 kg CO2 eq.**
Carbon footprint of the distribution phase [A4]	**3 kg CO2 eq.**
Carbon footprint of the installation phase [A5]	**0.5 kg CO2 eq.**
Carbon footprint of the use phase [B2, B3, B4, B6]	**6 310 kg CO2 eq.**
Carbon footprint of the end-of-life phase [C1 to C4]	**2 kg CO2 eq.**

Use Better

Materials and Substances

Packaging made with recycled cardboard	**Yes**
Packaging without single use plastic	**No**
SCIP Number	**Cc71a744-5621-4411-9c01-0b5589085e26**
EU RoHS Directive	**Compliant By Exemption**
REACh Regulation	**Reference contains Substances of Very High Concern above the threshold**
California proposition 65	**WARNING: This product can expose you to chemicals including: Phenyl glycidyl ether, which is known to the State of California to cause cancer and birth defects or other reproductive harm. For more information go to www.P65Warnings.ca.gov**
PVC free	**Yes**

Use Longer

Lifetime extension

Repair	**No**

Use Again

Repack and remanufacture

Take-back	**No**
WEEE Label	**The product must be disposed on European Union markets following specific waste collection and never end up in rubbish bins.**

Technical Illustration

Dimensions

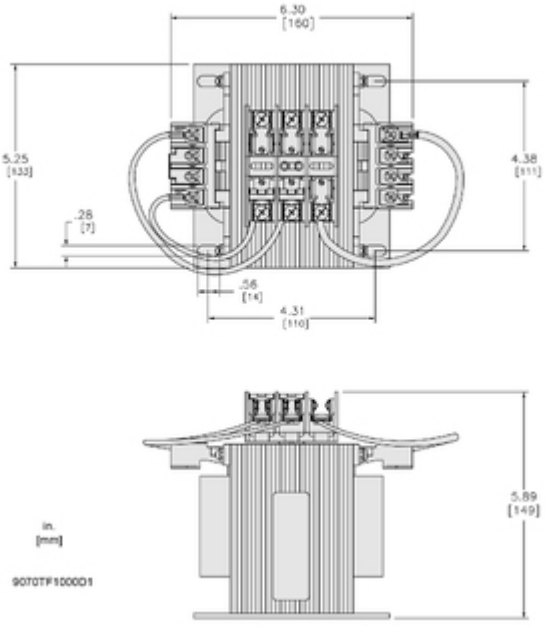

Technical Illustration

Wiring diagram

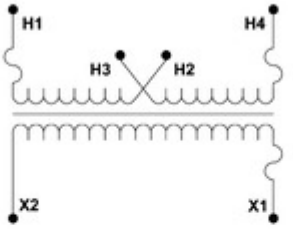

Options

Voltage Code	Voltages		Connections	
	Primary	Secondary	Primary	Secondary
D1	220 x 440 230 x 460 240 x 480	110 115 120	220 or 230 or 240: Connect to H1 and H4 Jumper H1 with H3 Jumper H2 with H4 440 or 460 or 480: Connect to H1 and H4 Jumper H2 with H3	Connect to X1 and X2

REFER TO TECHNICAL DOCUMENTATION FOR COMPLETE INFORMATION.