







HPS Tribune™

Drive Isolation Transformers

Hammond Power Solutions

HPS Tribune™
Drive Isolation Transformers

TABLE OF CONTENTS

Specifications & Accessories	3
Selection Tables - HPS Tribune™	4
Termination Details	13
Enclosure Dimensional Drawings	14
Enclosure Wall Mounting Dimensions	16
Enclosure Ceiling Mounting Dimensions	17
Anti-Vibration Pad & Vibration Isolator Kits	18
Electrical Schematics & Connection Drawings	19

HPS drive isolation transformers are designed to meet the rugged demands of both AC and DC variable speed drives and also to provide the required voltage change. HPS offers two lines of drive isolation transformers compliant to different levels of efficiency. This brochure covers our lowest efficiency option. For higher efficiency option(s) please refer to HPS Tribune E catalog.



BENEFITS

- Standard Type 3R enclosure suitable for indoor or outdoor applications
- Standard integral floor and wall mounting brackets up to 51kVA allow for faster installation
- All units utilize a uniform 220°C insulation system with a 80°C, 115°C, or 150°C temperature rise
- Industry leading design solutions, technology and materials continue the legacy of quality and reliability in all HPS products



FEATURES

Core & Coil Construction:

- Manufactured from quality non-aging, cold rolled, silicon steel laminations using state-of-the-art equipment
- Cores are precision cut to close tolerances which eliminates burrs and improves performance
- Core is coated to prevent the ingress of moisture
- Precision wound with copper or aluminum conductors that are electrically balanced to minimize axial forces during short-circuit conditions
- Robust interface between core & coils for better short circuit performance

Conductor material: Copper or Aluminum
Temperature rise: 150°C typical (low rise options avail.)
Insulation system: 220°C

Specifications & Accessories - Copper or Aluminum



7.5 to 175 kVA



220 to 660 kVA

	7.5 to 175 kVA	220 to 660 kVA
UL Listed:	File: E112313	File: E112313
CSA Certified:	File: LR3902	File: LR3902
Frequency:	60 Hz	60 Hz
Insulation System:	220°C (150°C rise) 200°C (130°C rise) on some Copper units up to 40kVA	220°C (150°C rise) (Optional 115°C and 80°C rise available)
Enclosure Type:	Heavy duty ventilated type 3R Optional type 4, 4X (stainless steel) and 12	Heavy duty ventilated type 3R Optional type 4, 4X (stainless steel) and 12
Enclosure Finish:	ANSI 61 Grey, UL50	ANSI 61 Grey, UL50
Neutral:	Neutral terminal for field connection (on applicable units)	Neutral terminal for field connection (on applicable units)
Standard Primary Taps:	Refer to wiring diagrams for details	Refer to wiring diagrams for details
Termination:	Front accessible separate high and low voltage terminations; suitable for copper and aluminum are provided for easy cable installation	Front accessible separate high and low voltage terminations, suitable for copper and aluminum are provided for easy cable installation
Thermostat:	Standard on all units	Standard on all units
Conduit Knock-Outs:	Standard on all units (no knock-outs on Stainless Steel enclosures)	None
Impedance:	Typically 3 to 6%	Typically 3 to 6%
Mounting:	Floor mounting available on all units. Wall & ceiling mount available on units up to 750 lbs Refer to selection tables for details	Floor mounting only
Short Circuit Withstand:	Meets UL and CSA short circuit withstand requirements	Meets UL and CSA short circuit withstand requirements.

Data subject to change without notice.

Selection Tables

Listed below are our standard voltages. Other primary and secondary voltages available are 240, 380 and 600.

ALUMINUM WOUND, THREE PHASE

208 Delta Primary Volts 480Y Secondary Volts 60 Hz

kVA	Catalog Number	Case Style	Dimensions Inches [mm] Width	Depth	Height	Approx. Weight Lbs. [Kg]	Mtg Type W - Wall F - Floor	Wiring Diagram
7.5	**DM007BK**	NH5	19.40 [492.76]	20.20 [513.08]	21.50 [546.10]	150.0 [68.0]	F or W *	SCD 8
11	**DM011BK**	NH5	19.40 [492.76]	20.20 [513.08]	21.50 [546.10]	160.0 [72.0]	F or W *	SCD 8
14	**DM014BK**	NH5	19.40 [492.76]	20.20 [513.08]	21.50 [546.10]	170.0 [77.0]	F or W *	SCD 8
20	**DM020BK**	NH6	23.90 [607.06]	25.00 [635.00]	28.75 [730.25]	240.0 [108.0]	F or W *	SCD 7
27	**DM027BK**	NH6	23.90 [607.06]	25.00 [635.00]	28.75 [730.25]	300.0 [135.0]	F or W *	SCD 7
34	**DM034BK**	NH6	23.90 [607.06]	25.00 [635.00]	28.75 [730.25]	330.0 [149.0]	F or W *	SCD 7
40	**DM040BK**	NH6	23.90 [607.06]	25.00 [635.00]	28.75 [730.25]	350.0 [158.0]	F or W *	SCD 7
51	**DM051BK**	NH6	23.90 [607.06]	25.00 [635.00]	28.75 [730.25]	430.0 [194.0]	F or W *	SCD 7
63	**DM063BK**	NH3	26.00 [660.40]	25.00 [635.00]	38.00 [965.20]	530.0 [239.0]	F or W *	SCD 7
75	**DM075BK**	NH3	26.00 [660.40]	25.00 [635.00]	38.00 [965.20]	580.0 [261.0]	F or W *	SCD 7
93	**DM093BK**	NH3	26.00 [660.40]	25.00 [635.00]	38.00 [965.20]	630.0 [284.0]	F or W *	SCD 7
118	**DM118BK**	NH3	26.00 [660.40]	25.00 [635.00]	38.00 [965.20]	730.0 [329.0]	F or W *	SCD 7
145	**DM145BK**	NH4	32.00 [812.80]	29.50 [749.30]	41.00 [1041.40]	830.0 [374.0]	F	SCD 7
175	**DM175BK**	NH4	32.00 [812.80]	29.50 [749.30]	41.00 [1041.40]	930.0 [419.0]	F	SCD 7
220	**DM220BK**	NH4	32.00 [812.80]	29.50 [749.30]	41.00 [1041.40]	1350.0 [610.0]	F	SCD 9
275	**DM275BK**	NJ1	39.50 [1003.30]	34.00 [863.60]	51.50 [1308.10]	1500.0 [680.0]	F	SCD 9
330	**DM330BK**	NJ1	39.50 [1003.30]	34.00 [863.60]	51.50 [1308.10]	1700.0 [770.0]	F	SCD 9
440	**DM440BK**	NJ2	48.50 [1231.90]	38.40 [975.36]	59.00 [1498.60]	2100.0 [950.0]	F	SCD 10
550	**DM550BK**	NJ2	48.50 [1231.90]	38.40 [975.36]	59.00 [1498.60]	2350.0 [1060.0]	F	SCD 10
660	**DM660BK**	NJ3	51.50 [1308.10]	43.40 [1102.36]	66.00 [1676.40]	2900.0 [1310.0]	F	SCD 10

For shielded units, please add the suffix "S" to the above part numbers. (i.e. DM075BKS)

*Wall mounting kit and/or drip plate kit required.

230 Delta Primary Volts 230Y Secondary Volts 60 Hz

kVA	Catalog Number	Case Style	Dimensions Inches [mm] Width	Depth	Height	Approx. Weight Lbs. [Kg]	Mtg Type W - Wall F - Floor	Wiring Diagram
7.5	**DM007CC**	NH5	19.40 [492.76]	20.20 [513.08]	21.50 [546.10]	150.0 [68.0]	F or W *	SCD 8
11	**DM011CC**	NH5	19.40 [492.76]	20.20 [513.08]	21.50 [546.10]	160.0 [72.0]	F or W *	SCD 8
14	**DM014CC**	NH5	19.40 [492.76]	20.20 [513.08]	21.50 [546.10]	170.0 [77.0]	F or W *	SCD 8
20	**DM020CC**	NH6	23.90 [607.06]	25.00 [635.00]	28.75 [730.25]	240.0 [108.0]	F or W *	SCD 7
27	**DM027CC**	NH6	23.90 [607.06]	25.00 [635.00]	28.75 [730.25]	300.0 [135.0]	F or W *	SCD 7
34	**DM034CC**	NH6	23.90 [607.06]	25.00 [635.00]	28.75 [730.25]	330.0 [149.0]	F or W *	SCD 7
40	**DM040CC**	NH6	23.90 [607.06]	25.00 [635.00]	28.75 [730.25]	350.0 [158.0]	F or W *	SCD 7
51	**DM051CC**	NH6	23.90 [607.06]	25.00 [635.00]	28.75 [730.25]	430.0 [194.0]	F or W *	SCD 7
63	**DM063CC**	NH3	26.00 [660.40]	25.00 [635.00]	38.00 [965.20]	530.0 [239.0]	F or W *	SCD 7
75	**DM075CC**	NH3	26.00 [660.40]	25.00 [635.00]	38.00 [965.20]	580.0 [261.0]	F or W *	SCD 7
93	**DM093CC**	NH3	26.00 [660.40]	25.00 [635.00]	38.00 [965.20]	630.0 [284.0]	F or W *	SCD 7
118	**DM118CC**	NH3	26.00 [660.40]	25.00 [635.00]	38.00 [965.20]	730.0 [329.0]	F or W *	SCD 7
145	**DM145CC**	NH4	32.00 [812.80]	29.50 [749.30]	41.00 [1041.40]	830.0 [374.0]	F	SCD 7
175	**DM175CC**	NH4	32.00 [812.80]	29.50 [749.30]	41.00 [1041.40]	930.0 [419.0]	F	SCD 7
220	**DM220CC**	NH4	32.00 [812.80]	29.50 [749.30]	41.00 [1041.40]	1350.0 [610.0]	F	SCD 9
275	**DM275CC**	NJ1	39.50 [1003.30]	34.00 [863.60]	51.50 [1308.10]	1500.0 [680.0]	F	SCD 9
330	**DM330CC**	NJ1	39.50 [1003.30]	34.00 [863.60]	51.50 [1308.10]	1700.0 [770.0]	F	SCD 9
440	**DM440CC**	NJ2	48.50 [1231.90]	38.40 [975.36]	59.00 [1498.60]	2100.0 [950.0]	F	SCD 10
550	**DM550CC**	NJ2	48.50 [1231.90]	38.40 [975.36]	59.00 [1498.60]	2350.0 [1060.0]	F	SCD 10
660	**DM660CC**	NJ3	51.50 [1308.10]	43.40 [1102.36]	66.00 [1676.40]	2900.0 [1310.0]	F	SCD 10

For shielded units, please add the suffix "S" to the above part numbers. (i.e. DM075CCS)

*Wall mounting kit and/or drip plate kit required.

Products listed on this page are available as 'CE Mark' products. Please consult our sales office.

Listed below are our standard voltages. Other primary and secondary voltages available are 240, 380 and 600.

ALUMINUM WOUND, THREE PHASE

460 Delta Primary Volts 230Y Secondary Volts 60 Hz

kVA	Catalog Number	Case Style	Dimensions Inches [mm] Width	Depth	Height	Approx. Weight Lbs. [Kg]	Mtg Type W - Wall F - Floor	Wiring Diagram
7.5	**DM007JC**	NH5	19.40 [492.76]	20.20 [513.08]	21.50 [546.10]	150.0 [68.0]	F or W *	SCD 8
11	**DM011JC**	NH5	19.40 [492.76]	20.20 [513.08]	21.50 [546.10]	160.0 [72.0]	F or W *	SCD 8
14	**DM014JC**	NH5	19.40 [492.76]	20.20 [513.08]	21.50 [546.10]	170.0 [77.0]	F or W *	SCD 8
20	**DM020JC**	NH6	23.90 [607.06]	25.00 [635.00]	28.75 [730.25]	240.0 [108.0]	F or W *	SCD 7
27	**DM027JC**	NH6	23.90 [607.06]	25.00 [635.00]	28.75 [730.25]	300.0 [135.0]	F or W *	SCD 7
34	**DM034JC**	NH6	23.90 [607.06]	25.00 [635.00]	28.75 [730.25]	330.0 [149.0]	F or W *	SCD 7
40	**DM040JC**	NH6	23.90 [607.06]	25.00 [635.00]	28.75 [730.25]	350.0 [158.0]	F or W *	SCD 7
51	**DM051JC**	NH6	23.90 [607.06]	25.00 [635.00]	28.75 [730.25]	430.0 [194.0]	F or W *	SCD 7
63	**DM063JC**	NH3	26.00 [660.40]	25.00 [635.00]	38.00 [965.20]	530.0 [239.0]	F or W *	SCD 7
75	**DM075JC**	NH3	26.00 [660.40]	25.00 [635.00]	38.00 [965.20]	580.0 [261.0]	F or W *	SCD 7
93	**DM093JC**	NH3	26.00 [660.40]	25.00 [635.00]	38.00 [965.20]	630.0 [284.0]	F or W *	SCD 7
118	**DM118JC**	NH3	26.00 [660.40]	25.00 [635.00]	38.00 [965.20]	730.0 [329.0]	F or W *	SCD 7
145	**DM145JC**	NH4	32.00 [812.80]	29.50 [749.30]	41.00 [1041.40]	830.0 [374.0]	F	SCD 7
175	**DM175JC**	NH4	32.00 [812.80]	29.50 [749.30]	41.00 [1041.40]	930.0 [419.0]	F	SCD 7
220	**DM220JC**	NH4	32.00 [812.80]	29.50 [749.30]	41.00 [1041.40]	1350.0 [610.0]	F	SCD 9
275	**DM275JC**	NJ1	39.50 [1003.30]	34.00 [863.60]	51.50 [1308.10]	1500.0 [680.0]	F	SCD 9
330	**DM330JC**	NJ1	39.50 [1003.30]	34.00 [863.60]	51.50 [1308.10]	1700.0 [770.0]	F	SCD 9
440	**DM440JC**	NJ2	48.50 [1231.90]	38.40 [975.36]	59.00 [1498.60]	2100.0 [950.0]	F	SCD 10
550	**DM550JC**	NJ2	48.50 [1231.90]	38.40 [975.36]	59.00 [1498.60]	2350.0 [1060.0]	F	SCD 10
660	**DM660JC**	NJ3	51.50 [1308.10]	43.40 [1102.36]	66.00 [1676.40]	2900.0 [1310.0]	F	SCD 10

For shielded units, please add the suffix "S" to the above part numbers. (i.e. DM075JCS)

*Wall mounting kit and/or drip plate kit required.

460 Delta Primary Volts 400Y Secondary Volts 60 Hz

kVA	Catalog Number	Case Style	Dimensions Inches [mm] Width	Depth	Height	Approx. Weight Lbs. [Kg]	Mtg Type W - Wall F - Floor	Wiring Diagram
7.5	**DM007JH**	NH5	19.40 [492.76]	20.20 [513.08]	21.50 [546.10]	150.0 [68.0]	F or W *	SCD 8
11	**DM011JH**	NH5	19.40 [492.76]	20.20 [513.08]	21.50 [546.10]	160.0 [72.0]	F or W *	SCD 8
14	**DM014JH**	NH5	19.40 [492.76]	20.20 [513.08]	21.50 [546.10]	170.0 [77.0]	F or W *	SCD 8
20	**DM020JH**	NH6	23.90 [607.06]	25.00 [635.00]	28.75 [730.25]	240.0 [108.0]	F or W *	SCD 7
27	**DM027JH**	NH6	23.90 [607.06]	25.00 [635.00]	28.75 [730.25]	300.0 [135.0]	F or W *	SCD 7
34	**DM034JH**	NH6	23.90 [607.06]	25.00 [635.00]	28.75 [730.25]	330.0 [149.0]	F or W *	SCD 7
40	**DM040JH**	NH6	23.90 [607.06]	25.00 [635.00]	28.75 [730.25]	350.0 [158.0]	F or W *	SCD 7
51	**DM051JH**	NH6	23.90 [607.06]	25.00 [635.00]	28.75 [730.25]	430.0 [194.0]	F or W *	SCD 7
63	**DM063JH**	NH3	26.00 [660.40]	25.00 [635.00]	38.00 [965.20]	530.0 [239.0]	F or W *	SCD 7
75	**DM075JH**	NH3	26.00 [660.40]	25.00 [635.00]	38.00 [965.20]	580.0 [261.0]	F or W *	SCD 7
93	**DM093JH**	NH3	26.00 [660.40]	25.00 [635.00]	38.00 [965.20]	630.0 [284.0]	F or W *	SCD 7
118	**DM118JH**	NH3	26.00 [660.40]	25.00 [635.00]	38.00 [965.20]	730.0 [329.0]	F or W *	SCD 7
145	**DM145JH**	NH4	32.00 [812.80]	29.50 [749.30]	41.00 [1041.40]	830.0 [374.0]	F	SCD 7
175	**DM175JH**	NH4	32.00 [812.80]	29.50 [749.30]	41.00 [1041.40]	930.0 [419.0]	F	SCD 7
220	**DM220JH**	NH4	32.00 [812.80]	29.50 [749.30]	41.00 [1041.40]	1350.0 [610.0]	F	SCD 9
275	**DM275JH**	NJ1	39.50 [1003.30]	34.00 [863.60]	51.50 [1308.10]	1500.0 [680.0]	F	SCD 9
330	**DM330JH**	NJ1	39.50 [1003.30]	34.00 [863.60]	51.50 [1308.10]	1700.0 [770.0]	F	SCD 9
440	**DM440JH**	NJ2	48.50 [1231.90]	38.40 [975.36]	59.00 [1498.60]	2100.0 [950.0]	F	SCD 10
550	**DM550JH**	NJ2	48.50 [1231.90]	38.40 [975.36]	59.00 [1498.60]	2350.0 [1060.0]	F	SCD 10
660	**DM660JH**	NJ3	51.50 [1308.10]	43.40 [1102.36]	66.00 [1676.40]	2900.0 [1310.0]	F	SCD 10

For shielded units, please add the suffix "S" to the above part numbers. (i.e. DM075JHS)

*Wall mounting kit and/or drip plate kit required.

Products listed on this page are available as 'CE Mark' products. Please consult our sales office.

Data subject to change without notice.

Selection Tables

Listed below are our standard voltages. Other primary and secondary voltages available are 240, 380 and 600.

ALUMINUM WOUND, THREE PHASE

460 Delta Primary Volts 460Y Secondary Volts 60 Hz

kVA	Catalog Number	Case Style	Dimensions Inches [mm] Width	Depth	Height	Approx. Weight Lbs. [Kg]	Mtg Type W - Wall F - Floor	Wiring Diagram
7.5	**DM007JJ**	NH5	19.40 [492.76]	20.20 [513.08]	21.50 [546.10]	150.0 [68.0]	F or W *	SCD 8
11	**DM011JJ**	NH5	19.40 [492.76]	20.20 [513.08]	21.50 [546.10]	160.0 [72.0]	F or W *	SCD 8
14	**DM014JJ**	NH5	19.40 [492.76]	20.20 [513.08]	21.50 [546.10]	170.0 [77.0]	F or W *	SCD 8
20	**DM020JJ**	NH6	23.90 [607.06]	25.00 [635.00]	28.75 [730.25]	240.0 [108.0]	F or W *	SCD 7
27	**DM027JJ**	NH6	23.90 [607.06]	25.00 [635.00]	28.75 [730.25]	300.0 [135.0]	F or W *	SCD 7
34	**DM034JJ**	NH6	23.90 [607.06]	25.00 [635.00]	28.75 [730.25]	330.0 [149.0]	F or W *	SCD 7
40	**DM040JJ**	NH6	23.90 [607.06]	25.00 [635.00]	28.75 [730.25]	350.0 [158.0]	F or W *	SCD 7
51	**DM051JJ**	NH6	23.90 [607.06]	25.00 [635.00]	28.75 [730.25]	430.0 [194.0]	F or W *	SCD 7
63	**DM063JJ**	NH3	26.00 [660.40]	25.00 [635.00]	38.00 [965.20]	530.0 [239.0]	F or W *	SCD 7
75	**DM075JJ**	NH3	26.00 [660.40]	25.00 [635.00]	38.00 [965.20]	580.0 [261.0]	F or W *	SCD 7
93	**DM093JJ**	NH3	26.00 [660.40]	25.00 [635.00]	38.00 [965.20]	630.0 [284.0]	F or W *	SCD 7
118	**DM118JJ**	NH3	26.00 [660.40]	25.00 [635.00]	38.00 [965.20]	730.0 [329.0]	F or W *	SCD 7
145	**DM145JJ**	NH4	32.00 [812.80]	29.50 [749.30]	41.00 [1041.40]	830.0 [374.0]	F	SCD 7
175	**DM175JJ**	NH4	32.00 [812.80]	29.50 [749.30]	41.00 [1041.40]	930.0 [419.0]	F	SCD 7
220	**DM220JJ**	NH4	32.00 [812.80]	29.50 [749.30]	41.00 [1041.40]	1350.0 [610.0]	F	SCD 9
275	**DM275JJ**	NJ1	39.50 [1003.30]	34.00 [863.60]	51.50 [1308.10]	1500.0 [680.0]	F	SCD 9
330	**DM330JJ**	NJ1	39.50 [1003.30]	34.00 [863.60]	51.50 [1308.10]	1700.0 [770.0]	F	SCD 9
440	**DM440JJ**	NJ2	48.50 [1231.90]	38.40 [975.36]	59.00 [1498.60]	2100.0 [950.0]	F	SCD 10
550	**DM550JJ**	NJ2	48.50 [1231.90]	38.40 [975.36]	59.00 [1498.60]	2350.0 [1060.0]	F	SCD 10
660	**DM660JJ**	NJ3	51.50 [1308.10]	43.40 [1102.36]	66.00 [1676.40]	2900.0 [1310.0]	F	SCD 10

For shielded units, please add the suffix "S" to the above part numbers. (i.e. DM075JJS)

*Wall mounting kit and/or drip plate kit required.

480 Delta Primary Volts 240Y Secondary Volts 60 Hz

kVA	Catalog Number	Case Style	Dimensions Inches [mm] Width	Depth	Height	Approx. Weight Lbs. [Kg]	Mtg Type W - Wall F - Floor	Wiring Diagram
7.5	**DM007KD**	NH5	19.40 [492.76]	20.20 [513.08]	21.50 [546.10]	150.0 [68.0]	F or W *	SCD 8
11	**DM011KD**	NH5	19.40 [492.76]	20.20 [513.08]	21.50 [546.10]	160.0 [72.0]	F or W *	SCD 8
14	**DM014KD**	NH5	19.40 [492.76]	20.20 [513.08]	21.50 [546.10]	170.0 [77.0]	F or W *	SCD 8
20	**DM020KD**	NH6	23.90 [607.06]	25.00 [635.00]	28.75 [730.25]	240.0 [108.0]	F or W *	SCD 7
27	**DM027KD**	NH6	23.90 [607.06]	25.00 [635.00]	28.75 [730.25]	300.0 [135.0]	F or W *	SCD 7
34	**DM034KD**	NH6	23.90 [607.06]	25.00 [635.00]	28.75 [730.25]	330.0 [149.0]	F or W *	SCD 7
40	**DM040KD**	NH6	23.90 [607.06]	25.00 [635.00]	28.75 [730.25]	350.0 [158.0]	F or W *	SCD 7
51	**DM051KD**	NH6	23.90 [607.06]	25.00 [635.00]	28.75 [730.25]	430.0 [194.0]	F or W *	SCD 7
63	**DM063KD**	NH3	26.00 [660.40]	25.00 [635.00]	38.00 [965.20]	530.0 [239.0]	F or W *	SCD 7
75	**DM075KD**	NH3	26.00 [660.40]	25.00 [635.00]	38.00 [965.20]	580.0 [261.0]	F or W *	SCD 7
93	**DM093KD**	NH3	26.00 [660.40]	25.00 [635.00]	38.00 [965.20]	630.0 [284.0]	F or W *	SCD 7
118	**DM118KD**	NH3	26.00 [660.40]	25.00 [635.00]	38.00 [965.20]	730.0 [329.0]	F or W *	SCD 7
145	**DM145KD**	NH4	32.00 [812.80]	29.50 [749.30]	41.00 [1041.40]	830.0 [374.0]	F	SCD 7
175	**DM175KD**	NH4	32.00 [812.80]	29.50 [749.30]	41.00 [1041.40]	930.0 [419.0]	F	SCD 7
220	**DM220KD**	NH4	32.00 [812.80]	29.50 [749.30]	41.00 [1041.40]	1350.0 [610.0]	F	SCD 9
275	**DM275KD**	NJ1	39.50 [1003.30]	34.00 [863.60]	51.50 [1308.10]	1500.0 [680.0]	F	SCD 9
330	**DM330KD**	NJ1	39.50 [1003.30]	34.00 [863.60]	51.50 [1308.10]	1700.0 [770.0]	F	SCD 9
440	**DM440KD**	NJ2	48.50 [1231.90]	38.40 [975.36]	59.00 [1498.60]	2100.0 [950.0]	F	SCD 10
550	**DM550KD**	NJ2	48.50 [1231.90]	38.40 [975.36]	59.00 [1498.60]	2350.0 [1060.0]	F	SCD 10
660	**DM660KD**	NJ3	51.50 [1308.10]	43.40 [1102.36]	66.00 [1676.40]	2900.0 [1310.0]	F	SCD 10

For shielded units, please add the suffix "S" to the above part numbers. (i.e. DM075KDS)

*Wall mounting kit and/or drip plate kit required.

Products listed on this page are available as 'CE Mark' products. Please consult our sales office.

Listed below are our standard voltages. Other primary and secondary voltages available are 240, 380 and 600.

ALUMINUM WOUND, THREE PHASE

480 Delta Primary Volts 480Y Secondary Volts 60 Hz

kVA	Catalog Number	Case Style	Dimensions Inches [mm] Width	Depth	Height	Approx. Weight Lbs. [Kg]	Mtg Type W - Wall F - Floor	Wiring Diagram
7.5	**DM007KK**	NH5	19.40 [492.76]	20.20 [513.08]	21.50 [546.10]	150.0 [68.0]	F or W *	SCD 8
11	**DM011KK**	NH5	19.40 [492.76]	20.20 [513.08]	21.50 [546.10]	160.0 [72.0]	F or W *	SCD 8
14	**DM014KK**	NH5	19.40 [492.76]	20.20 [513.08]	21.50 [546.10]	170.0 [77.0]	F or W *	SCD 8
20	**DM020KK**	NH6	23.90 [607.06]	25.00 [635.00]	28.75 [730.25]	240.0 [108.0]	F or W *	SCD 7
27	**DM027KK**	NH6	23.90 [607.06]	25.00 [635.00]	28.75 [730.25]	300.0 [135.0]	F or W *	SCD 7
34	**DM034KK**	NH6	23.90 [607.06]	25.00 [635.00]	28.75 [730.25]	330.0 [149.0]	F or W *	SCD 7
40	**DM040KK**	NH6	23.90 [607.06]	25.00 [635.00]	28.75 [730.25]	350.0 [158.0]	F or W *	SCD 7
51	**DM051KK**	NH6	23.90 [607.06]	25.00 [635.00]	28.75 [730.25]	430.0 [194.0]	F or W *	SCD 7
63	**DM063KK**	NH3	26.00 [660.40]	25.00 [635.00]	38.00 [965.20]	530.0 [239.0]	F or W *	SCD 7
75	**DM075KK**	NH3	26.00 [660.40]	25.00 [635.00]	38.00 [965.20]	580.0 [261.0]	F or W *	SCD 7
93	**DM093KK**	NH3	26.00 [660.40]	25.00 [635.00]	38.00 [965.20]	630.0 [284.0]	F or W *	SCD 7
118	**DM118KK**	NH3	26.00 [660.40]	25.00 [635.00]	38.00 [965.20]	730.0 [329.0]	F or W *	SCD 7
145	**DM145KK**	NH4	32.00 [812.80]	29.50 [749.30]	41.00 [1041.40]	830.0 [374.0]	F	SCD 7
175	**DM175KK**	NH4	32.00 [812.80]	29.50 [749.30]	41.00 [1041.40]	930.0 [419.0]	F	SCD 7
220	**DM220KK**	NH4	32.00 [812.80]	29.50 [749.30]	41.00 [1041.40]	1350.0 [610.0]	F	SCD 9
275	**DM275KK**	NJ1	39.50 [1003.30]	34.00 [863.60]	51.50 [1308.10]	1500.0 [680.0]	F	SCD 9
330	**DM330KK**	NJ1	39.50 [1003.30]	34.00 [863.60]	51.50 [1308.10]	1700.0 [770.0]	F	SCD 9
440	**DM440KK**	NJ2	48.50 [1231.90]	38.40 [975.36]	59.00 [1498.60]	2100.0 [950.0]	F	SCD 10
550	**DM550KK**	NJ2	48.50 [1231.90]	38.40 [975.36]	59.00 [1498.60]	2350.0 [1060.0]	F	SCD 10
660	**DM660KK**	NJ3	51.50 [1308.10]	43.40 [1102.36]	66.00 [1676.40]	2900.0 [1310.0]	F	SCD 10

For shielded units, please add the suffix "S" to the above part numbers. (i.e. DM075KKS)

*Wall mounting kit and/or drip plate kit required.

575 Delta Primary Volts 460Y Secondary Volts 60 Hz

kVA	Catalog Number	Case Style	Dimensions Inches [mm] Width	Depth	Height	Approx. Weight Lbs. [Kg]	Mtg Type W - Wall F - Floor	Wiring Diagram
7.5	**DM007NJ**	NH5	19.40 [492.76]	20.20 [513.08]	21.50 [546.10]	150.0 [68.0]	F or W *	SCD 8
11	**DM011NJ**	NH5	19.40 [492.76]	20.20 [513.08]	21.50 [546.10]	160.0 [72.0]	F or W *	SCD 8
14	**DM014NJ**	NH5	19.40 [492.76]	20.20 [513.08]	21.50 [546.10]	170.0 [77.0]	F or W *	SCD 8
20	**DM020NJ**	NH6	23.90 [607.06]	25.00 [635.00]	28.75 [730.25]	240.0 [108.0]	F or W *	SCD 7
27	**DM027NJ**	NH6	23.90 [607.06]	25.00 [635.00]	28.75 [730.25]	300.0 [135.0]	F or W *	SCD 7
34	**DM034NJ**	NH6	23.90 [607.06]	25.00 [635.00]	28.75 [730.25]	330.0 [149.0]	F or W *	SCD 7
40	**DM040NJ**	NH6	23.90 [607.06]	25.00 [635.00]	28.75 [730.25]	350.0 [158.0]	F or W *	SCD 7
51	**DM051NJ**	NH6	23.90 [607.06]	25.00 [635.00]	28.75 [730.25]	430.0 [194.0]	F or W *	SCD 7
63	**DM063NJ**	NH3	26.00 [660.40]	25.00 [635.00]	38.00 [965.20]	530.0 [239.0]	F or W *	SCD 7
75	**DM075NJ**	NH3	26.00 [660.40]	25.00 [635.00]	38.00 [965.20]	580.0 [261.0]	F or W *	SCD 7
93	**DM093NJ**	NH3	26.00 [660.40]	25.00 [635.00]	38.00 [965.20]	630.0 [284.0]	F or W *	SCD 7
118	**DM118NJ**	NH3	26.00 [660.40]	25.00 [635.00]	38.00 [965.20]	730.0 [329.0]	F or W *	SCD 7
145	**DM145NJ**	NH4	32.00 [812.80]	29.50 [749.30]	41.00 [1041.40]	830.0 [374.0]	F	SCD 7
175	**DM175NJ**	NH4	32.00 [812.80]	29.50 [749.30]	41.00 [1041.40]	930.0 [419.0]	F	SCD 7
220	**DM220NJ**	NH4	32.00 [812.80]	29.50 [749.30]	41.00 [1041.40]	1350.0 [610.0]	F	SCD 9
275	**DM275NJ**	NJ1	39.50 [1003.30]	34.00 [863.60]	51.50 [1308.10]	1500.0 [680.0]	F	SCD 9
330	**DM330NJ**	NJ1	39.50 [1003.30]	34.00 [863.60]	51.50 [1308.10]	1700.0 [770.0]	F	SCD 9
440	**DM440NJ**	NJ2	48.50 [1231.90]	38.40 [975.36]	59.00 [1498.60]	2100.0 [950.0]	F	SCD 10
550	**DM550NJ**	NJ2	48.50 [1231.90]	38.40 [975.36]	59.00 [1498.60]	2350.0 [1060.0]	F	SCD 10
660	**DM660NJ**	NJ3	51.50 [1308.10]	43.40 [1102.36]	66.00 [1676.40]	2900.0 [1310.0]	F	SCD 10

For shielded units, please add the suffix "S" to the above part numbers. (i.e. DM075NJS)

*Wall mounting kit and/or drip plate kit required.

Products listed on this page are available as 'CE Mark' products. Please consult our sales office.

Selection Tables

Listed below are our standard voltages. Other primary and secondary voltages available are 240, 380 and 600.

COPPER WOUND, THREE PHASE

460 Delta Primary Volts 400Y Secondary Volts 60 Hz

kVA	Catalog Number	Case Style	Dimensions Inches [mm] Width	Depth	Height	Approx. Weight Lbs. [Kg]	Mtg Type W - Wall F - Floor	Wiring Diagram
7.5	**DM007JHCN**	NH5	19.40 [492.76]	20.20 [513.08]	21.50 [546.10]	150.0 [68.0]	F or W *	SCD 8
11	**DM011JHCN**	NH5	19.40 [492.76]	20.20 [513.08]	21.50 [546.10]	170.0 [77.0]	F or W *	SCD 8
14	**DM014JHCN**	NH5	19.40 [492.76]	20.20 [513.08]	21.50 [546.10]	210.0 [95.0]	F or W *	SCD 8
20	**DM020JHCN**	NH6	23.90 [607.06]	25.00 [635.00]	28.75 [730.25]	270.0 [122.0]	F or W *	SCD 7
27	**DM027JHCN**	NH6	23.90 [607.06]	25.00 [635.00]	28.75 [730.25]	330.0 [149.0]	F or W *	SCD 7
34	**DM034JHC**	NH6	23.90 [607.06]	25.00 [635.00]	28.75 [730.25]	350.0 [158.0]	F or W *	SCD 7
40	**DM040JHC**	NH6	23.90 [607.06]	25.00 [635.00]	28.75 [730.25]	380.0 [171.0]	F or W *	SCD 7
51	**DM051JHC**	NH6	23.90 [607.06]	25.00 [635.00]	28.75 [730.25]	450.0 [203.0]	F or W *	SCD 7
63	**DM063JHC**	NH3	26.00 [660.40]	25.00 [635.00]	38.00 [965.20]	550.0 [248.0]	F or W *	SCD 7
75	**DM075JHC**	NH3	26.00 [660.40]	25.00 [635.00]	38.00 [965.20]	600.0 [270.0]	F or W *	SCD 7
93	**DM093JHC**	NH3	26.00 [660.40]	25.00 [635.00]	38.00 [965.20]	630.0 [284.0]	F or W *	SCD 7
118	**DM118JHC**	NH3	26.00 [660.40]	25.00 [635.00]	38.00 [965.20]	880.0 [396.0]	F	SCD 7
145	**DM145JHC**	NH4	32.00 [812.80]	29.50 [749.30]	41.00 [1041.40]	930.0 [419.0]	F	SCD 7
175	**DM175JHC**	NH4	32.00 [812.80]	29.50 [749.30]	41.00 [1041.40]	1100.0 [500.0]	F	SCD 7
220	**DM220JHC**	NH4	32.00 [812.80]	29.50 [749.30]	41.00 [1041.40]	1450.0 [650.0]	F	SCD 9
275	**DM275JHC**	NJ1	39.50 [1003.30]	34.00 [863.60]	51.50 [1308.10]	1680.0 [760.0]	F	SCD 9
330	**DM330JHC**	NJ1	39.50 [1003.30]	34.00 [863.60]	51.50 [1308.10]	1850.0 [830.0]	F	SCD 9
440	**DM440JHC**	NJ2	48.50 [1231.90]	38.40 [975.36]	59.00 [1498.60]	2350.0 [1060.0]	F	SCD 10
550	**DM550JHC**	NJ2	48.50 [1231.90]	38.40 [975.36]	59.00 [1498.60]	2800.0 [1260.0]	F	SCD 10
660	**DM660JHC**	NJ3	51.50 [1308.10]	43.40 [1102.36]	66.00 [1676.40]	3250.0 [1460.0]	F	SCD 10

For shielded units, please replace the suffix "C" with a 'K' on the above part numbers. (i.e. DM075JHK)

*Wall mounting kit and/or drip plate kit required.

460 Delta Primary Volts 460Y Secondary Volts 60 Hz

kVA	Catalog Number	Case Style	Dimensions Inches [mm] Width	Depth	Height	Approx. Weight Lbs. [Kg]	Mtg Type W - Wall F - Floor	Wiring Diagram
7.5	**DM007JJCN**	NH5	19.40 [492.76]	20.20 [513.08]	21.50 [546.10]	150.0 [68.0]	F or W *	SCD 8
11	**DM011JJCN**	NH5	19.40 [492.76]	20.20 [513.08]	21.50 [546.10]	170.0 [77.0]	F or W *	SCD 8
14	**DM014JJCN**	NH5	19.40 [492.76]	20.20 [513.08]	21.50 [546.10]	210.0 [95.0]	F or W *	SCD 8
20	**DM020JJCN**	NH6	23.90 [607.06]	25.00 [635.00]	28.75 [730.25]	270.0 [122.0]	F or W *	SCD 7
27	**DM027JJCN**	NH6	23.90 [607.06]	25.00 [635.00]	28.75 [730.25]	330.0 [149.0]	F or W *	SCD 7
34	**DM034JJC**	NH6	23.90 [607.06]	25.00 [635.00]	28.75 [730.25]	350.0 [158.0]	F or W *	SCD 7
40	**DM040JJC**	NH6	23.90 [607.06]	25.00 [635.00]	28.75 [730.25]	380.0 [171.0]	F or W *	SCD 7
51	**DM051JJC**	NH6	23.90 [607.06]	25.00 [635.00]	28.75 [730.25]	450.0 [203.0]	F or W *	SCD 7
63	**DM063JJC**	NH3	26.00 [660.40]	25.00 [635.00]	38.00 [965.20]	550.0 [248.0]	F or W *	SCD 7
75	**DM075JJC**	NH3	26.00 [660.40]	25.00 [635.00]	38.00 [965.20]	600.0 [270.0]	F or W *	SCD 7
93	**DM093JJC**	NH3	26.00 [660.40]	25.00 [635.00]	38.00 [965.20]	630.0 [284.0]	F or W *	SCD 7
118	**DM118JJC**	NH3	26.00 [660.40]	25.00 [635.00]	38.00 [965.20]	880.0 [396.0]	F	SCD 7
145	**DM145JJC**	NH4	32.00 [812.80]	29.50 [749.30]	41.00 [1041.40]	930.0 [419.0]	F	SCD 7
175	**DM175JJC**	NH4	32.00 [812.80]	29.50 [749.30]	41.00 [1041.40]	1100.0 [500.0]	F	SCD 7
220	**DM220JJC**	NH4	32.00 [812.80]	29.50 [749.30]	41.00 [1041.40]	1450.0 [650.0]	F	SCD 9
275	**DM275JJC**	NJ1	39.50 [1003.30]	34.00 [863.60]	51.50 [1308.10]	1680.0 [760.0]	F	SCD 9
330	**DM330JJC**	NJ1	39.50 [1003.30]	34.00 [863.60]	51.50 [1308.10]	1850.0 [830.0]	F	SCD 9
440	**DM440JJC**	NJ2	48.50 [1231.90]	38.40 [975.36]	59.00 [1498.60]	2350.0 [1060.0]	F	SCD 10
550	**DM550JJC**	NJ2	48.50 [1231.90]	38.40 [975.36]	59.00 [1498.60]	2800.0 [1260.0]	F	SCD 10
660	**DM660JJC**	NJ3	51.50 [1308.10]	43.40 [1102.36]	66.00 [1676.40]	3250.0 [1460.0]	F	SCD 10

For shielded units, please replace the suffix "C" with a 'K' on the above part numbers. (i.e. DM075JJK)

*Wall mounting kit and/or drip plate kit required.

Products listed on this page are available as 'CE Mark' products. Please consult our sales office.

Listed below are our standard voltages. Other primary and secondary voltages available are 240, 380 and 600.

COPPER WOUND, THREE PHASE

480 Delta Primary Volts 240Y Secondary Volts 60 Hz

kVA	Catalog Number	Case Style	Dimensions Inches [mm] Width	Depth	Height	Approx. Weight Lbs. [Kg]	Mtg Type W - Wall F - Floor	Wiring Diagram
7.5	**DM007KDCN**	NH5	19.40 [492.76]	20.20 [513.08]	21.50 [546.10]	150.0 [68.0]	F or W *	SCD 8
11	**DM011KDCN**	NH5	19.40 [492.76]	20.20 [513.08]	21.50 [546.10]	170.0 [77.0]	F or W *	SCD 8
14	**DM014KDCN**	NH5	19.40 [492.76]	20.20 [513.08]	21.50 [546.10]	210.0 [95.0]	F or W *	SCD 8
20	**DM020KDCN**	NH6	23.90 [607.06]	25.00 [635.00]	28.75 [730.25]	270.0 [122.0]	F or W *	SCD 7
27	**DM027KDCN**	NH6	23.90 [607.06]	25.00 [635.00]	28.75 [730.25]	330.0 [149.0]	F or W *	SCD 7
34	**DM034KDCN**	NH6	23.90 [607.06]	25.00 [635.00]	28.75 [730.25]	350.0 [158.0]	F or W *	SCD 7
40	**DM040KDC**	NH6	23.90 [607.06]	25.00 [635.00]	28.75 [730.25]	380.0 [171.0]	F or W *	SCD 7
51	**DM051KDC**	NH6	23.90 [607.06]	25.00 [635.00]	28.75 [730.25]	450.0 [203.0]	F or W *	SCD 7
63	**DM063KDC**	NH3	26.00 [660.40]	25.00 [635.00]	38.00 [965.20]	550.0 [248.0]	F or W *	SCD 7
75	**DM075KDC**	NH3	26.00 [660.40]	25.00 [635.00]	38.00 [965.20]	600.0 [270.0]	F or W *	SCD 7
93	**DM093KDC**	NH3	26.00 [660.40]	25.00 [635.00]	38.00 [965.20]	630.0 [284.0]	F or W *	SCD 7
118	**DM118KDC**	NH3	26.00 [660.40]	25.00 [635.00]	38.00 [965.20]	880.0 [396.0]	F	SCD 7
145	**DM145KDC**	NH4	32.00 [812.80]	29.50 [749.30]	41.00 [1041.40]	930.0 [419.0]	F	SCD 7
175	**DM175KDC**	NH4	32.00 [812.80]	29.50 [749.30]	41.00 [1041.40]	1100.0 [500.0]	F	SCD 7
220	**DM220KDC**	NH4	32.00 [812.80]	29.50 [749.30]	41.00 [1041.40]	1450.0 [650.0]	F	SCD 9
275	**DM275KDC**	NJ1	39.50 [1003.30]	34.00 [863.60]	51.50 [1308.10]	1680.0 [760.0]	F	SCD 9
330	**DM330KDC**	NJ1	39.50 [1003.30]	34.00 [863.60]	51.50 [1308.10]	1850.0 [830.0]	F	SCD 9
440	**DM440KDC**	NJ2	48.50 [1231.90]	38.40 [975.36]	59.00 [1498.60]	2350.0 [1060.0]	F	SCD 10
550	**DM550KDC**	NJ2	48.50 [1231.90]	38.40 [975.36]	59.00 [1498.60]	2800.0 [1260.0]	F	SCD 10
660	**DM660KDC**	NJ3	51.50 [1308.10]	43.40 [1102.36]	66.00 [1676.40]	3250.0 [1460.0]	F	SCD 10

For shielded units, please replace the suffix "C" with a 'K' on the above part numbers. (i.e. DM075KDK)

*Wall mounting kit and/or drip plate kit required.

480 Delta Primary Volts 480Y Secondary Volts 60 Hz

kVA	Catalog Number	Case Style	Dimensions Inches [mm] Width	Depth	Height	Approx. Weight Lbs. [Kg]	Mtg Type W - Wall F - Floor	Wiring Diagram
7.5	**DM007KKCN**	NH5	19.40 [492.76]	20.20 [513.08]	21.50 [546.10]	150.0 [68.0]	F or W *	SCD 8
11	**DM011KKCN**	NH5	19.40 [492.76]	20.20 [513.08]	21.50 [546.10]	170.0 [77.0]	F or W *	SCD 8
14	**DM014KKCN**	NH5	19.40 [492.76]	20.20 [513.08]	21.50 [546.10]	210.0 [95.0]	F or W *	SCD 8
20	**DM020KKCN**	NH6	23.90 [607.06]	25.00 [635.00]	28.75 [730.25]	270.0 [122.0]	F or W *	SCD 7
27	**DM027KKCN**	NH6	23.90 [607.06]	25.00 [635.00]	28.75 [730.25]	330.0 [149.0]	F or W *	SCD 7
34	**DM034KKCN**	NH6	23.90 [607.06]	25.00 [635.00]	28.75 [730.25]	350.0 [158.0]	F or W *	SCD 7
40	**DM040KKC**	NH6	23.90 [607.06]	25.00 [635.00]	28.75 [730.25]	380.0 [171.0]	F or W *	SCD 7
51	**DM051KKC**	NH6	23.90 [607.06]	25.00 [635.00]	28.75 [730.25]	450.0 [203.0]	F or W *	SCD 7
63	**DM063KKC**	NH3	26.00 [660.40]	25.00 [635.00]	38.00 [965.20]	550.0 [248.0]	F or W *	SCD 7
75	**DM075KKC**	NH3	26.00 [660.40]	25.00 [635.00]	38.00 [965.20]	600.0 [270.0]	F or W *	SCD 7
93	**DM093KKC**	NH3	26.00 [660.40]	25.00 [635.00]	38.00 [965.20]	630.0 [284.0]	F or W *	SCD 7
118	**DM118KKC**	NH3	26.00 [660.40]	25.00 [635.00]	38.00 [965.20]	880.0 [396.0]	F	SCD 7
145	**DM145KKC**	NH4	32.00 [812.80]	29.50 [749.30]	41.00 [1041.40]	930.0 [419.0]	F	SCD 7
175	**DM175KKC**	NH4	32.00 [812.80]	29.50 [749.30]	41.00 [1041.40]	1100.0 [500.0]	F	SCD 7
220	**DM220KKC**	NH4	32.00 [812.80]	29.50 [749.30]	41.00 [1041.40]	1450.0 [650.0]	F	SCD 9
275	**DM275KKC**	NJ1	39.50 [1003.30]	34.00 [863.60]	51.50 [1308.10]	1680.0 [760.0]	F	SCD 9
330	**DM330KKC**	NJ1	39.50 [1003.30]	34.00 [863.60]	51.50 [1308.10]	1850.0 [830.0]	F	SCD 9
440	**DM440KKC**	NJ2	48.50 [1231.90]	38.40 [975.36]	59.00 [1498.60]	2350.0 [1060.0]	F	SCD 10
550	**DM550KKC**	NJ2	48.50 [1231.90]	38.40 [975.36]	59.00 [1498.60]	2800.0 [1260.0]	F	SCD 10
660	**DM660KKC**	NJ3	51.50 [1308.10]	43.40 [1102.36]	66.00 [1676.40]	3250.0 [1460.0]	F	SCD 10

For shielded units, please replace the suffix "C" with a 'K' on the above part numbers. (i.e. DM075KKK)

*Wall mounting kit and/or drip plate kit required.

Selection Tables

Listed below are our standard voltages. Other primary and secondary voltages available are 240, 380 and 600.

COPPER WOUND, THREE PHASE

575 Delta Primary Volts 460Y Secondary Volts 60 Hz

kVA	Catalog Number	Case Style	Dimensions Inches [mm] Width	Depth	Height	Approx. Weight Lbs. [Kg]	Mtg Type W - Wall F - Floor	Wiring Diagram
7.5	**DM007NJCN**	NH5	19.40 [492.76]	20.20 [513.08]	21.50 [546.10]	150.0 [68.0]	F or W *	SCD 8
11	**DM011NJCN**	NH5	19.40 [492.76]	20.20 [513.08]	21.50 [546.10]	170.0 [77.0]	F or W *	SCD 8
14	**DM014NJCN**	NH5	19.40 [492.76]	20.20 [513.08]	21.50 [546.10]	210.0 [95.0]	F or W *	SCD 8
20	**DM020NJCN**	NH6	23.90 [607.06]	25.00 [635.00]	28.75 [730.25]	270.0 [122.0]	F or W *	SCD 7
27	**DM027NJCN**	NH6	23.90 [607.06]	25.00 [635.00]	28.75 [730.25]	330.0 [149.0]	F or W *	SCD 7
34	**DM034NJCN**	NH6	23.90 [607.06]	25.00 [635.00]	28.75 [730.25]	350.0 [158.0]	F or W *	SCD 7
40	**DM040NJCN**	NH6	23.90 [607.06]	25.00 [635.00]	28.75 [730.25]	380.0 [171.0]	F or W *	SCD 7
51	**DM051NJC**	NH6	23.90 [607.06]	25.00 [635.00]	28.75 [730.25]	450.0 [203.0]	F or W *	SCD 7
63	**DM063NJC**	NH3	26.00 [660.40]	25.00 [635.00]	38.00 [965.20]	550.0 [248.0]	F or W *	SCD 7
75	**DM075NJC**	NH3	26.00 [660.40]	25.00 [635.00]	38.00 [965.20]	600.0 [270.0]	F or W *	SCD 7
93	**DM093NJC**	NH3	26.00 [660.40]	25.00 [635.00]	38.00 [965.20]	630.0 [284.0]	F or W *	SCD 7
118	**DM118NJC**	NH3	26.00 [660.40]	25.00 [635.00]	38.00 [965.20]	880.0 [396.0]	F	SCD 7
145	**DM145NJC**	NH4	32.00 [812.80]	29.50 [749.30]	41.00 [1041.40]	930.0 [419.0]	F	SCD 7
175	**DM175NJC**	NH4	32.00 [812.80]	29.50 [749.30]	41.00 [1041.40]	1100.0 [500.0]	F	SCD 7
220	**DM220NJC**	NH4	32.00 [812.80]	29.50 [749.30]	41.00 [1041.40]	1450.0 [650.0]	F	SCD 9
275	**DM275NJC**	NJ1	39.50 [1003.30]	34.00 [863.60]	51.50 [1308.10]	1680.0 [760.0]	F	SCD 9
330	**DM330NJC**	NJ1	39.50 [1003.30]	34.00 [863.60]	51.50 [1308.10]	1850.0 [830.0]	F	SCD 9
440	**DM440NJC**	NJ2	48.50 [1231.90]	38.40 [975.36]	59.00 [1498.60]	2350.0 [1060.0]	F	SCD 10
550	**DM550NJC**	NJ2	48.50 [1231.90]	38.40 [975.36]	59.00 [1498.60]	2800.0 [1260.0]	F	SCD 10
660	**DM660NJC**	NJ3	51.50 [1308.10]	43.40 [1102.36]	66.00 [1676.40]	3250.0 [1460.0]	F	SCD 10

For shielded units, please replace the suffix "C" with a 'K' on the above part numbers. (i.e. DM075NJK)

*Wall mounting kit and/or drip plate kit required.

575 Delta Primary Volts 575Y Secondary Volts 60 Hz

kVA	Catalog Number	Case Style	Dimensions Inches [mm] Width	Depth	Height	Approx. Weight Lbs. [Kg]	Mtg Type W - Wall F - Floor	Wiring Diagram
7.5	**DM007NNCN**	NH5	19.40 [492.76]	20.20 [513.08]	21.50 [546.10]	150.0 [68.0]	F or W *	SCD 8
11	**DM011NNCN**	NH5	19.40 [492.76]	20.20 [513.08]	21.50 [546.10]	170.0 [77.0]	F or W *	SCD 8
14	**DM014NNCN**	NH5	19.40 [492.76]	20.20 [513.08]	21.50 [546.10]	210.0 [95.0]	F or W *	SCD 8
20	**DM020NNCN**	NH6	23.90 [607.06]	25.00 [635.00]	28.75 [730.25]	270.0 [122.0]	F or W *	SCD 7
27	**DM027NNCN**	NH6	23.90 [607.06]	25.00 [635.00]	28.75 [730.25]	330.0 [149.0]	F or W *	SCD 7
34	**DM034NNCN**	NH6	23.90 [607.06]	25.00 [635.00]	28.75 [730.25]	350.0 [158.0]	F or W *	SCD 7
40	**DM040NNCN**	NH6	23.90 [607.06]	25.00 [635.00]	28.75 [730.25]	380.0 [171.0]	F or W *	SCD 7
51	**DM051NNC**	NH6	23.90 [607.06]	25.00 [635.00]	28.75 [730.25]	450.0 [203.0]	F or W *	SCD 7
63	**DM063NNC**	NH3	26.00 [660.40]	25.00 [635.00]	38.00 [965.20]	550.0 [248.0]	F or W *	SCD 7
75	**DM075NNC**	NH3	26.00 [660.40]	25.00 [635.00]	38.00 [965.20]	600.0 [270.0]	F or W *	SCD 7
93	**DM093NNC**	NH3	26.00 [660.40]	25.00 [635.00]	38.00 [965.20]	630.0 [284.0]	F or W *	SCD 7
118	**DM118NNC**	NH3	26.00 [660.40]	25.00 [635.00]	38.00 [965.20]	880.0 [396.0]	F	SCD 7
145	**DM145NNC**	NH4	32.00 [812.80]	29.50 [749.30]	41.00 [1041.40]	930.0 [419.0]	F	SCD 7
175	**DM175NNC**	NH4	32.00 [812.80]	29.50 [749.30]	41.00 [1041.40]	1100.0 [500.0]	F	SCD 7
220	**DM220NNC**	NH4	32.00 [812.80]	29.50 [749.30]	41.00 [1041.40]	1450.0 [650.0]	F	SCD 9
275	**DM275NNC**	NJ1	39.50 [1003.30]	34.00 [863.60]	51.50 [1308.10]	1680.0 [760.0]	F	SCD 9
330	**DM330NNC**	NJ1	39.50 [1003.30]	34.00 [863.60]	51.50 [1308.10]	1850.0 [830.0]	F	SCD 9
440	**DM440NNC**	NJ2	48.50 [1231.90]	38.40 [975.36]	59.00 [1498.60]	2350.0 [1060.0]	F	SCD 10
550	**DM550NNC**	NJ2	48.50 [1231.90]	38.40 [975.36]	59.00 [1498.60]	2800.0 [1260.0]	F	SCD 10
660	**DM660NNC**	NJ3	51.50 [1308.10]	43.40 [1102.36]	66.00 [1676.40]	3250.0 [1460.0]	F	SCD 10

For shielded units, please replace the suffix "C" with a 'K' on the above part numbers. (i.e. DM075NNK)

*Wall mounting kit and/or drip plate kit required.

Products listed on this page are available as 'CE Mark' products. Please consult our sales office.

Termination Details

Hammond Power Solutions

THREE PHASE, ALUMINUM AND COPPER TERMINATION - LUGS OR PADS

kVA	VOLTAGE							
	208	230	240	380	460	480	575	600
7.5	Lugs	Lugs	Lugs	Lugs	Lugs	Lugs	Lugs	Lugs
11	Lugs	Lugs	Lugs	Lugs	Lugs	Lugs	Lugs	Lugs
14	Lugs	Lugs	Lugs	Lugs	Lugs	Lugs	Lugs	Lugs
20	Lugs	Lugs	Lugs	Lugs	Lugs	Lugs	Lugs	Lugs
27	Lugs	Lugs	Lugs	Lugs	Lugs	Lugs	Lugs	Lugs
34	Lugs	Lugs	Lugs	Lugs	Lugs	Lugs	Lugs	Lugs
40	Lugs	Lugs	Lugs	Lugs	Lugs	Lugs	Lugs	Lugs
51	Lugs	Lugs	Lugs	Lugs	Lugs	Lugs	Lugs	Lugs
63	Lugs	Lugs	Lugs	Lugs	Lugs	Lugs	Lugs	Lugs
75	Lugs	Lugs	Lugs	Lugs	Lugs	Lugs	Lugs	Lugs
93	Lugs	Lugs	Lugs	Lugs	Lugs	Lugs	Lugs	Lugs
118	Diagram 1A	Diagram 1A	Diagram 1A	Lugs	Lugs	Lugs	Lugs	Lugs
145	Diagram 1A	Diagram 1A	Diagram 1A	Lugs	Lugs	Lugs	Lugs	Lugs
175	Diagram 1A	Diagram 1A	Diagram 1A	Lugs	Lugs	Lugs	Lugs	Lugs
220	Diagram 2	Diagram 1A	Diagram 1A	Diagram 1A	Diagram 1A	Lugs	Lugs	Lugs
275	Diagram 2	Diagram 2	Diagram 2	Diagram 1A	Diagram 1A	Diagram 1A	Diagram 1A	Lugs
330	Diagram 2	Diagram 2	Diagram 2	Diagram 1A	Diagram 1A	Diagram 1A	Diagram 1A	Diagram 1A
440	Diagram 3	Diagram 3	Diagram 3	Diagram 2	Diagram 1A	Diagram 1A	Diagram 1A	Diagram 1A
550	Diagram 3	Diagram 3	Diagram 3	Diagram 2	Diagram 2	Diagram 2	Diagram 1A	Diagram 1A
660	Diagram 3	Diagram 3	Diagram 3	Diagram 3	Diagram 2	Diagram 2	Diagram 2	Diagram 2

Dimensions in Inches [mm]

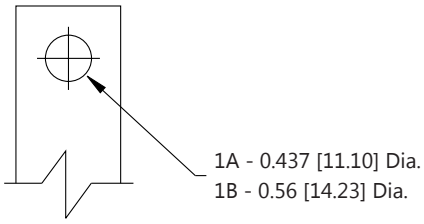

DIAGRAM 1

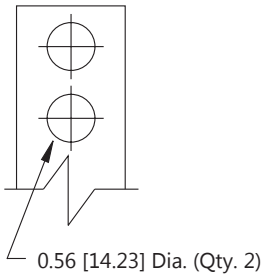

DIAGRAM 2

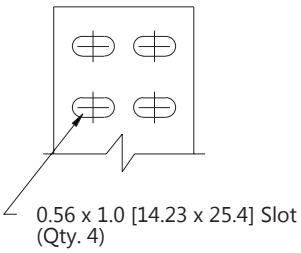

DIAGRAM 3

Enclosure Drawings

TYPE 3R ENCLOSURE DIMENSIONAL DRAWINGS

'NH' SERIES ENCLOSURES

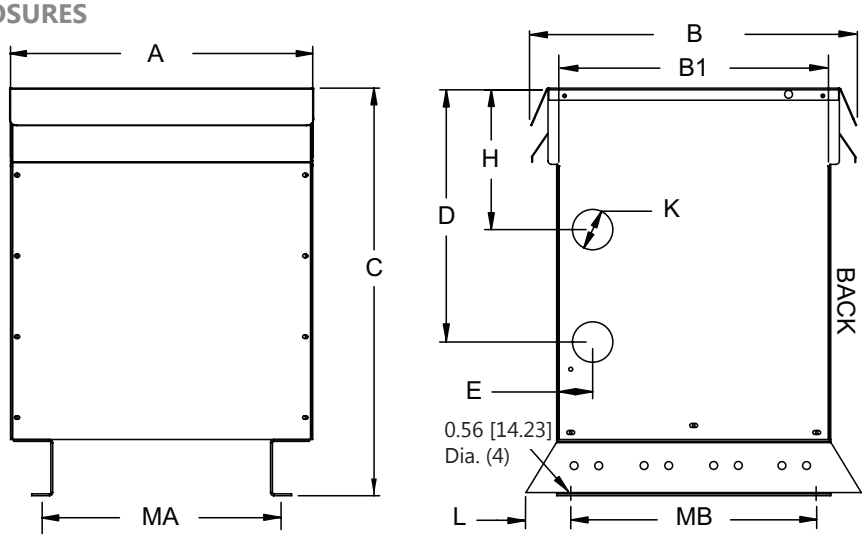

FRONT VIEW

All Dimensions in Inches

SIDE VIEW

Case Style	Dimensions in Inches [mm]										
	A	B	B[1]	C	D	E	H	K[1]	L	MA	MB
NH3	26.00 [660.40]	25.00 [635.00]	24.00 [609.60]	38.00 [965.20]	24.00 [609.60]	2.50 [63.50]	14.00 [355.60]	2.00 x 3.00 [50.8 x 76.2]	2.50 [63.50]	21.50 [546.10]	19.00 [482.60]
NH4	32.00 [812.80]	29.50 [749.30]	28.50 [723.90]	41.00 [1041.40]	24.00 [609.60]	2.50 [63.50]	12.00 [304.80]	2.00 x 3.00 [50.8 x 76.2]	2.50 [63.50]	23.50 [596.90]	23.50 [596.90]

Note: Mounting hole dimension is 0.56 [14.23] diameter.
[1] Knockout (K) sizes are actual diameters of knockout, not conduit sizes.

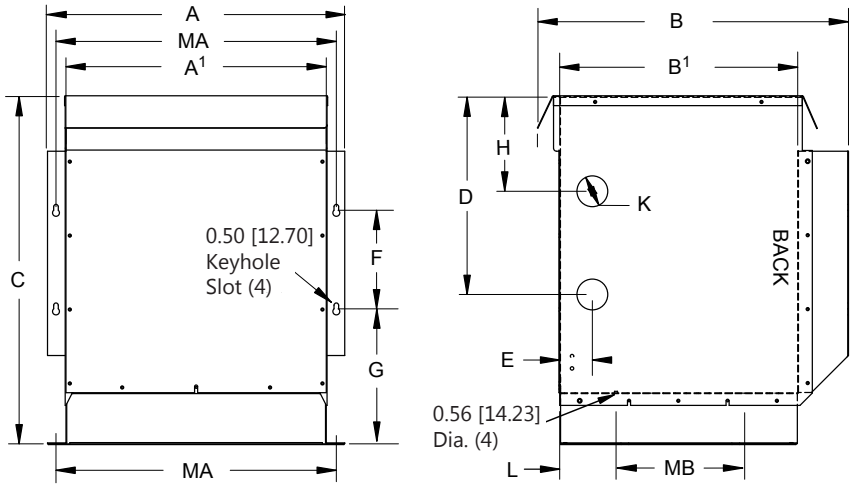

FRONT VIEW

All Dimensions in Inches

SIDE VIEW

Case Style	Dimensions in Inches [mm]													
	A	A[1]	B	B[1]	C	D	E	F	G	H	K[1]	L	MA	MB
NH5	19.40 [492.76]	16.75 [425.45]	20.20 [513.08]	15.00 [381.00]	21.50 [546.10]	12.00 [304.80]	2.00 [50.80]	7.00 [177.80]	7.81 [198.38]	6.00 [152.40]	1.38 x 1.75 [35.06 x 44.45]	2.80 [71.12]	18.00 [457.20]	9.00 [228.60]
NH6	23.90 [607.06]	21.50 [546.10]	25.00 [635.00]	19.50 [495.30]	28.75 [730.25]	17.00 [431.80]	2.00 [50.80]	8.00 [203.20]	10.29 [261.37]	8.50 [215.90]	1.38 x 2.50 [35.06 x 63.5]	5.20 [132.08]	22.75 [577.85]	9.00 [228.60]

Note: Mounting hole dimension is 0.56 [14.23] diameter.
[1] Knockout (K) sizes are actual diameters of knockout, not conduit sizes.

Data subject to change without notice.

TYPE 3R ENCLOSURE DIMENSIONAL DRAWINGS

'NJ' SERIES ENCLOSURES

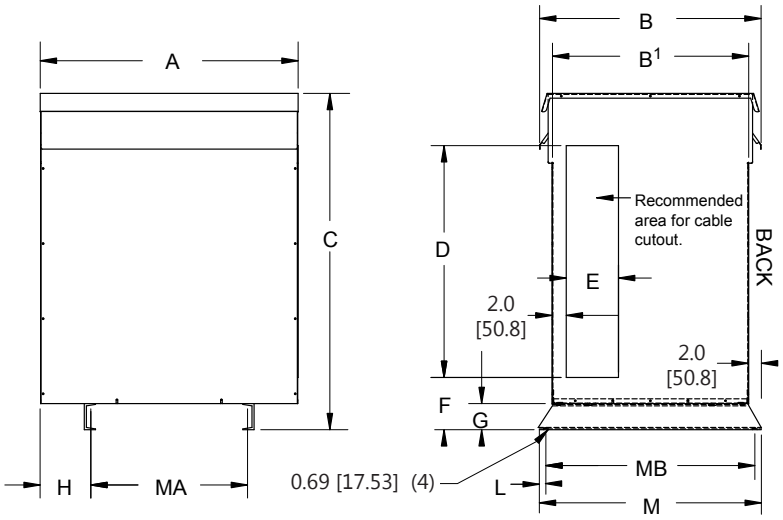

FRONT VIEW

All Dimensions in Inches

SIDE VIEW

Case Style	Dimensions in Inches [mm]												
	A	B	B1	C	D	E	F	G	H	L	M	MA	MB
NJ1*	39.50 [1003.30]	34.00 [863.60]	30.00 [762.00]	51.50 [1308.10]	35.50 [901.70]	6.00 [152.40]	8.00 [203.20]	4.00 [101.60]	7.75 [196.85]	1.00 [25.40]	34.00 [863.60]	24.00 [609.60]	32.00 [812.80]
NJ2	48.50 [1231.90]	38.00 [965.20]	34.00 [863.60]	59.00 [1498.60]	40.00 [1016.00]	8.00 [203.20]	8.00 [203.20]	4.00 [101.60]	10.50 [266.70]	1.00 [25.40]	38.00 [965.20]	27.50 [698.50]	36.00 [914.40]

Note: Mounting hole dimension is 0.69 [17.53] diameter.

*Optional Type 4, 12 and Stainless Steel Enclosure available.

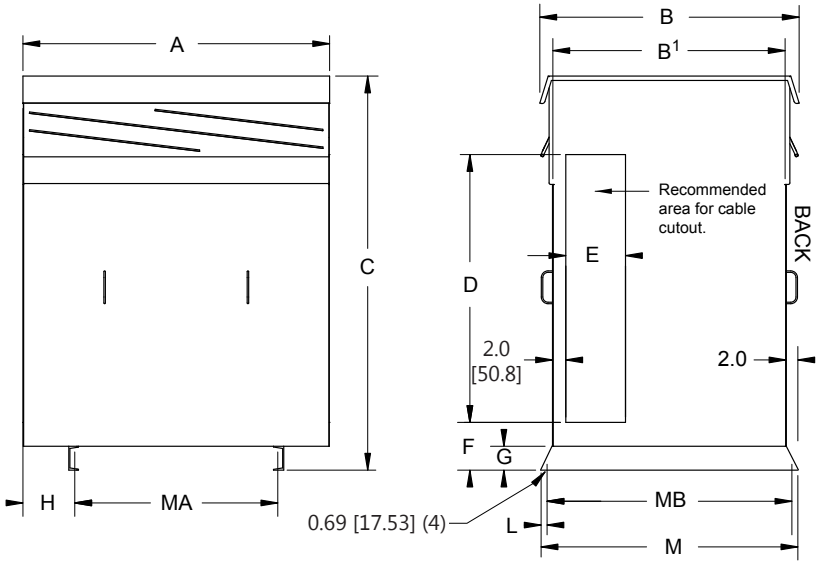

FRONT VIEW

All Dimensions in Inches

SIDE VIEW

Case Style	Dimensions in Inches [mm]												
	A	B	B1	C	D	E	F	G	H	L	M	MA	MB
NJ3	51.50 [1308.10]	43.40 [1102.36]	39.00 [990.60]	66.00 [1676.40]	47.00 [1193.80]	10.00 [254.00]	8.00 [203.20]	4.00 [101.60]	8.75 [222.25]	1.00 [25.40]	43.00 [1092.20]	34.00 [863.60]	41.00 [1041.40]

Note: Mounting hole dimension is 0.69 [17.53] diameter.

Enclosure Mounting Kits

If wall and/or ceiling mounting is desired for a transformer, optional mounting kits can be ordered separately. These mounting kits are NOT available for all enclosure case styles. Therefore, it is important that you confirm your enclosure case style, then use the selection table to the right to determine if A) a mounting kit is available and B) determine the correct HPS "Mounting Kit" part number that you must order. One kit is required for each transformer.

Note: Some of the mounting kits can be used for both wall and ceiling mount, while others are for wall mounting only. The table indicates which mounting methods are available for each kit. The NW2 wall/ceiling mounting kit also includes a drip plate.

The NW2 wall/ceiling mounting kit is only designed for units up to 800 lbs [341 kg] maximum.

Enclosure Case Style	Wall Mount Available	Ceiling Mount Available	HPS Mounting Kit P/N
NH3	Yes	Yes	NW2
NH4	No	No	N/A
NH5	Yes	Yes	NH5DP
NH6	Yes	Yes	NH6DP
NJ Series	No	No	N/A

NW2 WALL/CEILING MOUNTING KITS

The following drawings detail the wall and ceiling mounting dimensions required and method by which the NW2 kits are installed on the NH3 enclosures.

NW2 WALL MOUNT - MOUNTING DIMENSIONS

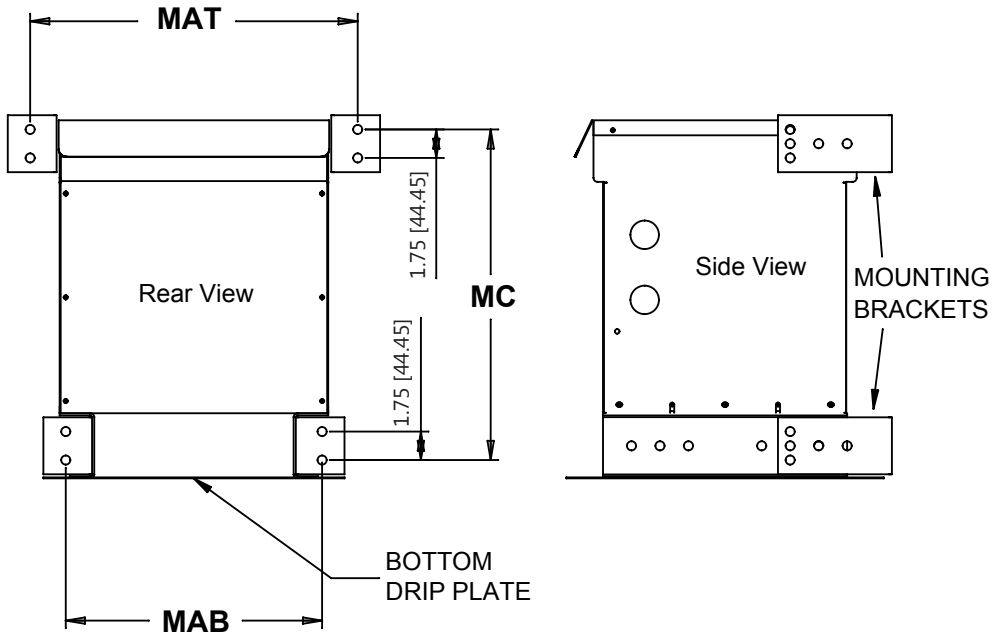

Wall Mounting Dimensions Inches [mm]				
Part No.	Enclosure	MAT	MAB	MC
NW2	NH3	29.38 [746.13]	23.50 [596.90]	6.50 [165.10]

Enclosure Wall / Ceiling Mounting Dimensions

Hammond Power Solutions

NW2 CEILING MOUNT - MOUNTING DIMENSIONS

Ceiling Mounting Dimensions Inches [mm]			
Part No.	**Enclosure**	**MA**	**MB**
NW2	NH3	26.50 [673.10]	11.75 [298.45]

NOTE: Please refer to enclosure dimensional drawings on page 12 for more detailed dimensional information.

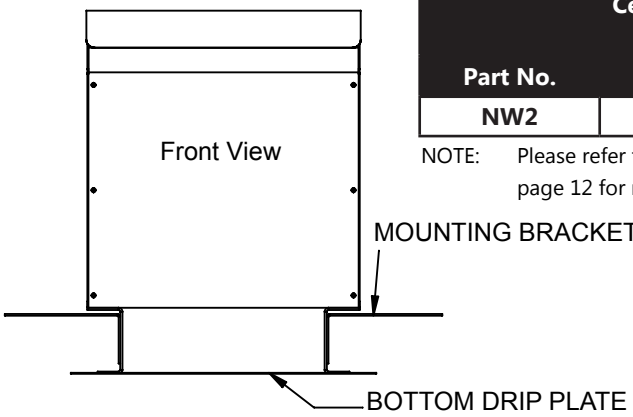

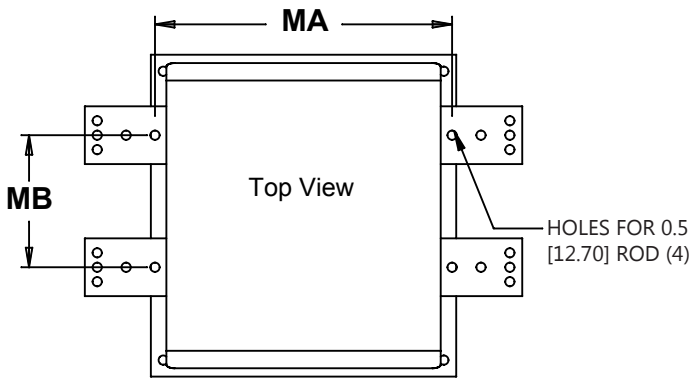

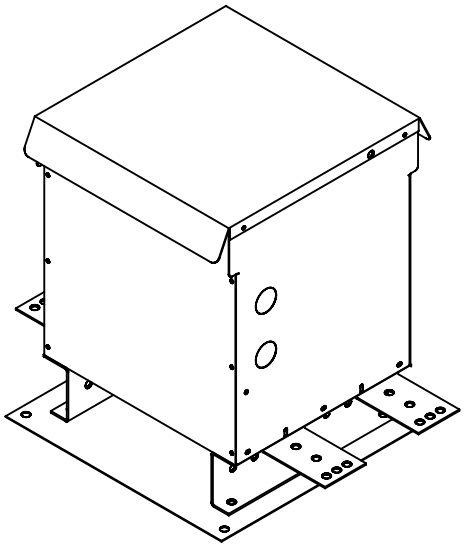

NH5DP & NH6DP WALL/CEILING MOUNTING KITS

The NH5 and NH6 enclosures are designed with integral wall mounting capabilities. However, when you wall mount them, you must also install the bottom drip plate as shown below. The "MB" dimensions listed in the table below indicate the location for the wall mounting hardware.

For ceiling mounting of the NH5 and NH6, refer to the "MA" dimensions listed in the table below and hang the enclosure using appropriate sized ceiling hanger rods. However, you must be sure to install the bottom drip plate to the bottom of the enclosure, then bring the hanger rod down through both the enclosure bottom mounting holes and through the drip plate mounting holes and install mounting hardware.

NOTE: Do not ceiling mount either the NH5 or NH6 enclosures without installing the bottom drip plate. All mounting hardware should be rated Grade 8 or higher.

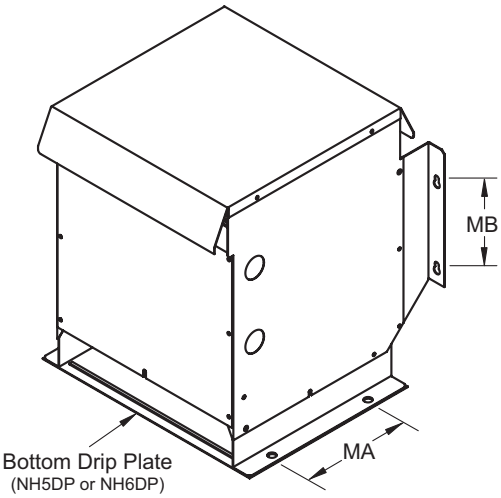

Mounting Kit P/N	Enclosure Style	MA Dimension	MB Dimension
NH5DP	NH5	9.00 [228.60]	7.00 [177.80]
NH6DP	NH6	9.00 [228.60]	8.00 [203.20]

Inches [mm]

Data subject to change without notice.

Anti-Vibration Pad & Vibration Isolator Kits

ANTI-VIBRATION PAD AND VIBRATION ISOLATOR KITS

All standard transformers come with installed internal vibration absorbing pads to minimize noise during operation. Optional external "anti-vibration" pad and "vibration isolator" (for higher noise dampening) kits can be used to reduce operating noise even further. All are resistant to industrial contaminants like oils, acids and alkalies.

ANTI-VIBRATION PAD KITS

Part No.	Case Style	Description
P1	NH Series	Set of four (4) rubber anti-vibration pads which replace the standard steel enclosure washe
P2	NJ Series	

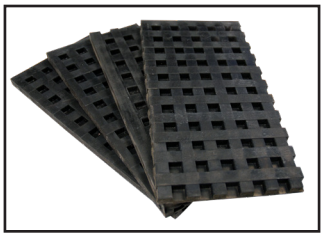

All Anti-Vibration Pad kits and Vibration Isolator kits contain a set of four (4) pads or isolators. Therefore only one kit is required per transformer.

VIBRATION ISOLATOR KITS

Part No.	Transformer Weight Lbs. [kgs]	Description
NMP1	Up to 340 [153]	Set of four (4) molded neoprene and steel plate assemblies that virtually eliminate vibration noise between the transformer and the mounting surface.
NMP2	341 to 680 [153 to 306]	
NMP3	681 to 1040 [306 to 470]	
NMP4	1041 to 1740 [470 to 780]	
NMP5	1741 to 2330 [780 to 1050]	
NMP6	2331 to 3450 [1050 to 1550]	
NMP7	3451 to 4690 [1550 to 2110]	

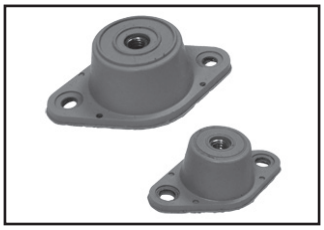

Electrical Schematics & Connection Drawings

Hammond Power Solutions

SCD 7

SCHEMATIC

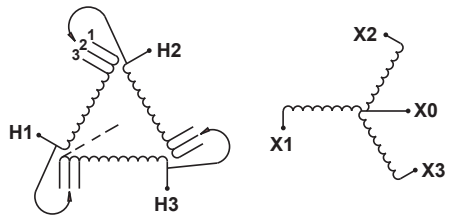

CONNECTIONS

Primary Volts										Connect lines to	Inter-connect
208	218	242	252	437	480	483	504	604	630	H1, H2, H3	1
198	208	230	240	416	456	460	480	575	600	H1, H2, H3	2
187	198	219	228	395	432	437	456	546	570	H1, H2, H3	3

Secondary Volts								Connect lines to		
208	230	240	380	416	460	480	600	X1, X2, X3		
120	133	139	220	240	265	277	347	X1, X0	X2, X0	X3, X0

SCD 8

SCHEMATIC

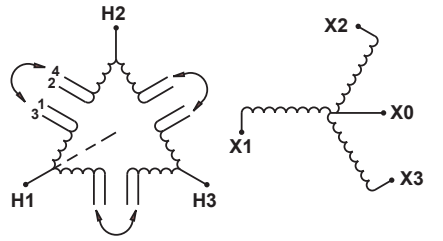

CONNECTIONS

Primary Volts									Connect lines to	Inter-connect
218	242	252	437	483	504	604	630	2520	H1, H2, H3	1-2
208	230	240	416	460	480	575	600	2400	H1, H2, H3	2-3
198	219	228	395	437	456	546	570	2280	H1, H2, H3	3-4

Secondary Volts								Connect lines to		
208	230	240	380	416	460	480	600	X1, X2, X3		
120	133	139	220	240	265	277	347	X1, X0	X2, X0	X3, X0

SCD 9

SCHEMATIC

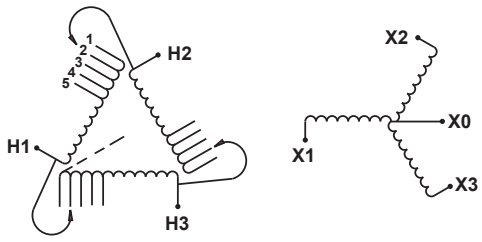

CONNECTIONS

Primary Volts								Connect lines to	Inter-connect
218	242	252	437	483	504	604	630	H1, H2, H3	1
213	236	246	426	472	492	589	615	H1, H2, H3	2
208	230	240	416	460	480	575	600	H1, H2, H3	3
203	224	234	406	449	468	561	585	H1, H2, H3	4
198	219	228	395	437	456	546	570	H1, H2, H3	5

Secondary Volts					Connect lines to	Inter-connect
208	380	416	480	600	X1, X2, X3	-
120	220	240	277	347	X1, X0	-
					X2, X0	-
					X3, X0	-

SCD 10

SCHEMATIC

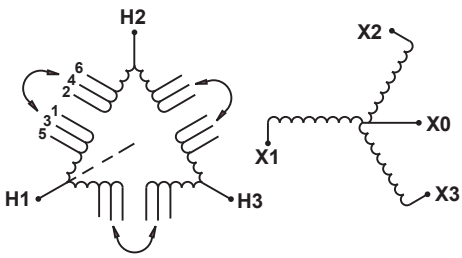

CONNECTIONS

Primary Volts										Connect lines to	Inter-connect
218	242	252	437	483	504	604	630	2520	4368	H1, H2, H3	1-2
213	236	246	426	472	492	589	615	2460	4264	H1, H2, H3	2-3
208	230	240	416	460	480	575	600	2400	4160	H1, H2, H3	3-4
203	224	234	406	449	468	561	585	2340	4056	H1, H2, H3	4-5
198	219	228	395	437	456	546	570	2280	3952	H1, H2, H3	5-6

Secondary Volts					Connect lines to	Inter-connect
208	380	416	480	600	X1, X2, X3	-
120	220	240	277	347	X1, X0	-
					X2, X0	-
					X3, X0	-

Data subject to change without notice.

Other Drive Solutions



HPS TruWave™ Active Harmonic Filter

HPS TruWave™ Active Harmonic Filter (AHF) is a comprehensive and flexible solution for harmonic mitigation. It provides advanced control and proven reliability that your facility needs to solve harmonic problems generated by non-linear loads such as variable frequency drives.

The AHF monitors load current and quickly responds to power system distortion as it develops. The AHF injects a corrective current to effectively cancel out harmonics produced by three phase non-linear loads. The result is a reduction in harmonic distortion to below 5%, complying with the IEEE-519 recommendations.



HPS Centurion™ P Passive Harmonic Filter

HPS Centurion P passive harmonic filter improves power quality by simultaneously reducing harmonics and improving true power factor.

The advanced HPS design delivers superior performance compared to traditional harmonic filters by reducing harmonic current distortion to less than 5% and correcting true power factor to over 95%, enabling users to meet IEEE 519 harmonic requirements.

The Centurion P passive harmonic filter consists of reactors and capacitors in an LCL arrangement designed to reduce a broad range of harmonics associated with VFD's and other three phase rectifiers.

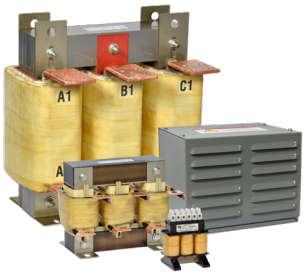

HPS Centurion™ R Reactor

The HPS Centurion™ R reactor provides a U.L. listed solution to many common drive issues.

Line reactor benefits:

- Minimizes harmonic current
- Attenuates voltage and current harmonics to reduce voltage notching
- Improves True Power Factor by reducing overall current distortion
- Mitigates drive nuisance tripping by attenuating voltage transients from sources such as PFCC, utility switching and lightning

When coordinated with a HPS TruWave Active Harmonic Filter, the system can reduce harmonics from variable frequency drives to under 5% THD.

Load reactor benefits:

- Reduces the motor's operating temperature & audible noise
- Mitigates motor bearing failures and insulation damage as a result of the reflected wave phenomenon
- Enhances the overall performance and life expectancy of the motor

Hammond Power Solutions

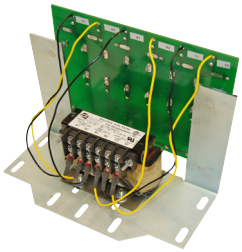

dV/dT Filter

The HPS dV/dT filter provides protection for motors by slowing the rate of voltage increase and minimizing the peak voltage that occurs at the motor's terminals and along the cables feeding the motor.
It does this by combining the harmonic current limiting ability of an AC line reactor plus a resistive capacitance circuit that forms a damped, low pass filter.
HPS dV/dT filters are specifically designed for drive/motor applications with long lead lengths (usually where the motor cable length is 100 feet and greater).



Energy Efficient Drive Isolation Transformers

HPS Tribune™ drive isolation transformers are suitable for both AC and DC variable speed drives. They are sized to match standard motor horsepower and voltage ratings.

Standard features include:

- Meets NRCan 2019
- Three phase ratings from 7 kVA to 660 kVA
- Available in aluminum, copper and optional shield
- UL Listed and CSA Certified
- Type 3R enclosure (optional Type 4, 12 or stainless)



HPS Multi-Pulse Transformer

Multi-Pulse transformers are designed specifically for harmonics, voltage distortion and other unique characteristics associated with individual manufacturer's drive systems. They provide the required supply voltage with the desired phase angle between secondary voltages for VFD systems/converters.

- HPS has significant experience with 18, 24, 36, 48 pulse drive/inverter duty transformers and auto-transformers in both low and medium voltage applications.

Typical Drive Current Waveforms

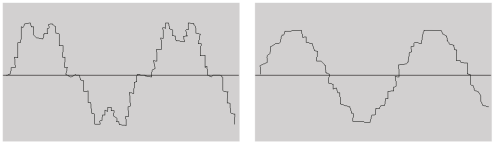

6 Pulse Rectifier

18 Pulse Rectifier

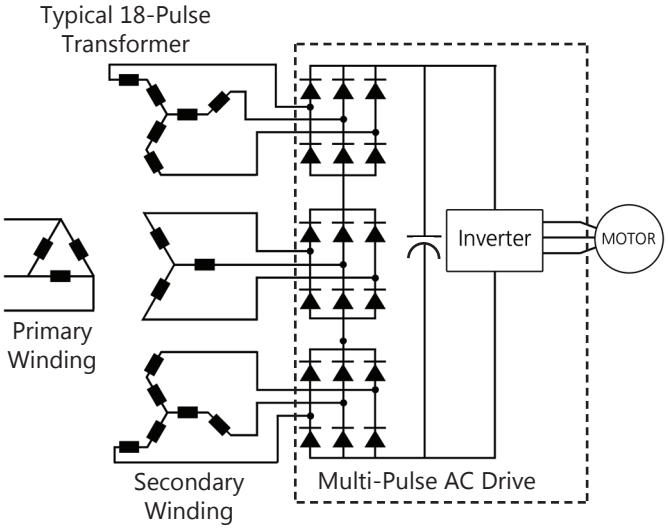

Data subject to change without notice.

Hammond Power Solutions


CANADA


UNITED STATES



MEXICO


ASIA

CANADA
Hammond Power Solutions
595 Southgate Drive
Guelph, Ontario N1G 3W6
Tel: (519) 822-2441
Fax: (519) 822-9701
Toll Free: 1-888-798-8882
sales@hammondpowersolutions.com

UNITED STATES
Hammond Power Solutions
1100 Lake Street
Baraboo, Wisconsin 53913-2866
Tel: (608) 356-3921
Fax: (608) 355-7623
Toll Free: 1-866-705-4684
sales@hammondpowersolutions.com

MEXICO
Hammond Power Solutions Latin America S.
Av. No. 800, Parque Industrial Guadalupe
Guadalupe, NL, Mexico, C.P. 67190.
Tel: (819) 690-8000
sales@hammondpowersolutions.com

ASIA
Hammond Power Solutions Pvt. Ltd.
Plot No 6A, Phase -1, IDA, Pashamylaram,
Patancheru (M) Sangareddy, 502 307, India
Tel: +91-994-995-0009
marketing-india@hammondpowersolutions.com

EMEA (Sales Office)
Hammond Power Solutions SpA
Tel: +49 (152) 08800468
sales-emea@hammondpowersolutions.com

TRIBSTD
Feb 2023