BOLT CLOSE CONDUIT/PIPE CLAMP, S304, 1 1/4" EMT, 0.266" HOLE

CATALOG NUMBER

CD2.5BSS



CERTIFICATIONS

FEATURES

- Retained bolt and built-in nut means there are less parts to handle or drop
- Combo head bolt works with slotted, hex, #3 phillips or #2 robertson drivers

PRODUCT ATTRIBUTES

- Material: Stainless Steel 304 (EN 1.4301)
- Nut Type: Hex Nut
- Outer Diameter: 1.220" – 1.510"
- EMT Conduit Size: 1 1/4"
- Hole Size: 0.266"
- Static Load 1: 200 lb
- Static Load 2: 50 lb

DIAGRAMS

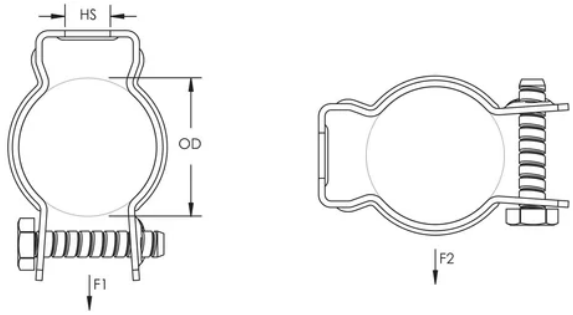

WARNING

nVent products shall be installed and used only as indicated in nVent's product instruction sheets and training materials. Instruction sheets are available at www.nvent.com and from your nVent customer service representative. Improper installation, misuse, misapplication or other failure to completely follow nVent's instructions and warnings may cause product malfunction, property damage, serious bodily injury and death and/or void your warranty.

North America
+1.800.753.9221
Option 1 – Customer Care
Option 2 – Technical Support

Europe
Netherlands:
+31 800-0200135
France:
+33 800 901 793

Europe
Germany:
800 1890272
Other Countries:
+31 13 5835404

APAC
Shanghai:
+ 86 21 2412 1618/19
Sydney:
+61 2 9751 8500

Our powerful portfolio of brands:
nVent.com CADDY ERICO HOFFMAN RAYCHEM SCHROFF TRACER

© 2023 nVent. All nVent marks and logos are owned or licensed by nVent Services GmbH or its affiliates. All other trademarks are the property of their respective owners.

nVent reserves the right to change specifications without notice.