Universal Pedestal Clamp

Part Number	Pedestal Size (Round or Square)	Bonding Conductor	Conductor Type	Load Rating
MBNUPCJ82	7/8" - 2"	#8 AWG - #2 AWG	Solid, Stranded[1]	50 lbs
MBNUPCJ240	7/8" - 2"	#2 AWG - 4/0 AWG	Solid, Stranded[2]	50 lbs
UPCJ	7/8" - 2"	-	-	50 lbs

1. Stranded conductors #8 - #2 AWG: 7 or 19 strands.
2. Solid Conductors: #2 AWG; Stranded Conductors: #2 AWG: 7 or 19 strands 1/0 - 4/0 AWG: 7, 19 or 37 strands

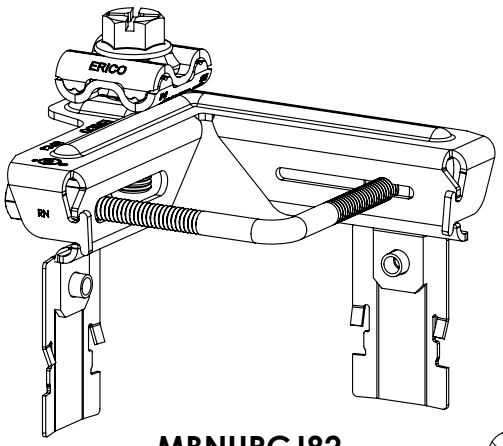

MBNUPCJ82

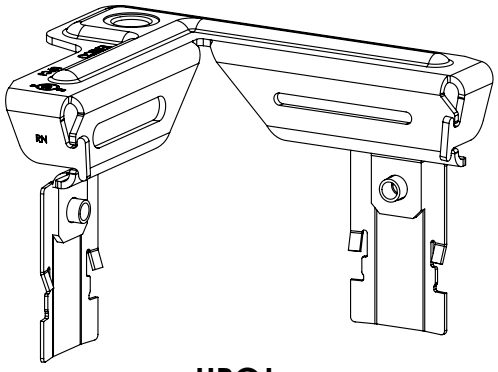

UPCJ

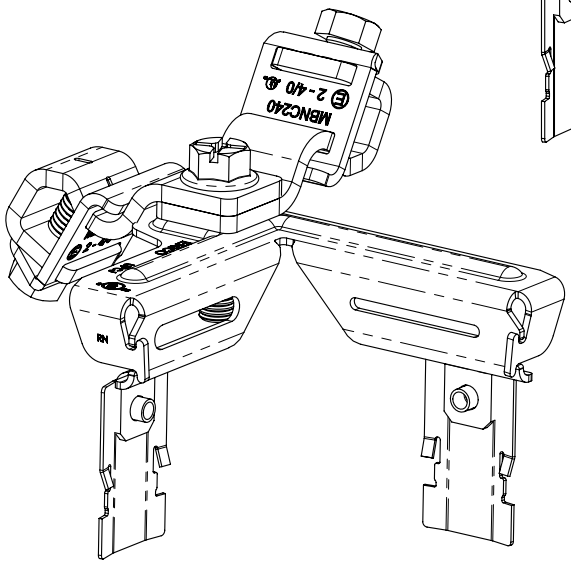

MBNUPCJ240

Notes:
- MBNUPCJ82, MBNUPCJ240 & UPCJ are UL® Listed per UL 2239 for support of any combination of UL® Listed nVent CADDY CAT HP J-hooks with a maximum total load rating of 50lbs.
- MBNUPCJ82 includes the MBNC82 ground clamp which is UL® Listed per ANSI®/UL 467
- MBNUPCJ240 includes the MBNC240 ground clamp which is UL® Listed per ANSI®/UL 467

WARNING:
1. nVent products shall be installed and used only as indicated in nVent product instruction sheets and training materials. Instruction sheets are available at www.nVent.com and from your nVent customer service representative.
2. nVent products must never be used for a purpose other than the purpose for which they were designed or in a manner that exceeds specified load ratings.
3. All instructions must be completely followed to ensure proper and safe installation and performance.
4. Improper installation, misuse, misapplication or other failure to completely follow nVent's instructions and warnings may cause product malfunction, property damage, serious bodily injury and/or death, and void your warranty.

SAFETY INSTRUCTIONS:
All governing codes and regulations and those required by the job site must be observed.
Always use appropriate safety equipment such as eye protection, hard hat, and gloves as appropriate to the application.

ANSI is a registered trademark of American National Standards Institute
UL is a registered trademark of UL LLC

nVent, nVent CADDY, nVent ERICO Cadweld, nVent ERICO Critec, nVent ERICO, nVent ERIFLEX, and nVent LENTON are owned by nVent or its global affiliates. All other trademarks arethe property of their respective owners. nVent reserves the right to change specifications without prior notice.

 © 2010-2018 nVent All Rights Reserved

Universal Pedestal Clamp

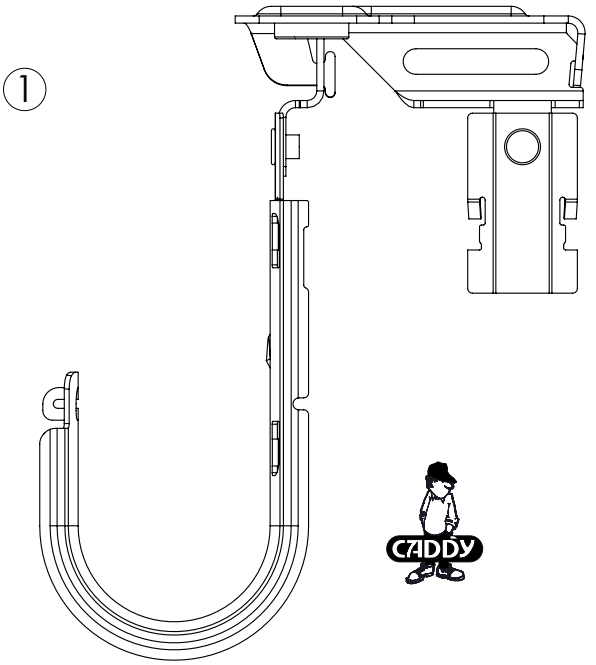

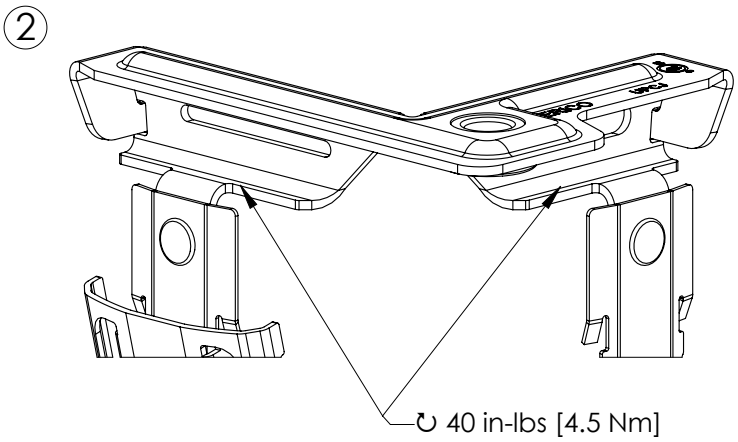

Installation:

1. For simplest installation nVent CADDY CAT HP J-Hooks, if specified, should be attached to pedestal clamp before installation on the pedestal.
2. Attachment of clamp to pedestal:
   - Secure nuts finger tight approximately equal distance on L-bolt.
   - Using a 9/16" wrench or socket, torque nuts to 40 in-lbs [4.5 N-m]
3. Conductor installation in MBNUPCJ82
   - Install parallel conductors on the same plane.
   - Using a 5/8" deep well socket torque nuts to 150 in-lbs [17 N-m]
   - Conductors must extend at least 1" outside of connector

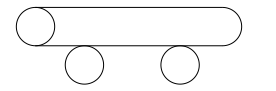

CORRECT
(MBNUPCJ82 Only)

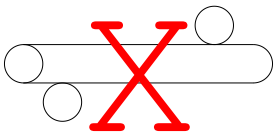

INCORRECT
(MBNUPCJ82 Only)

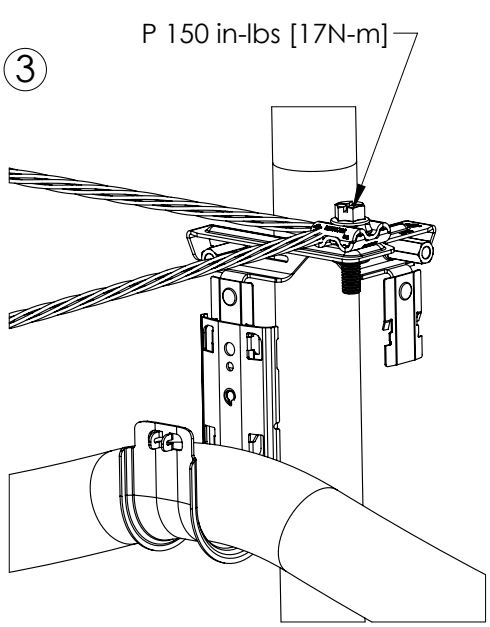

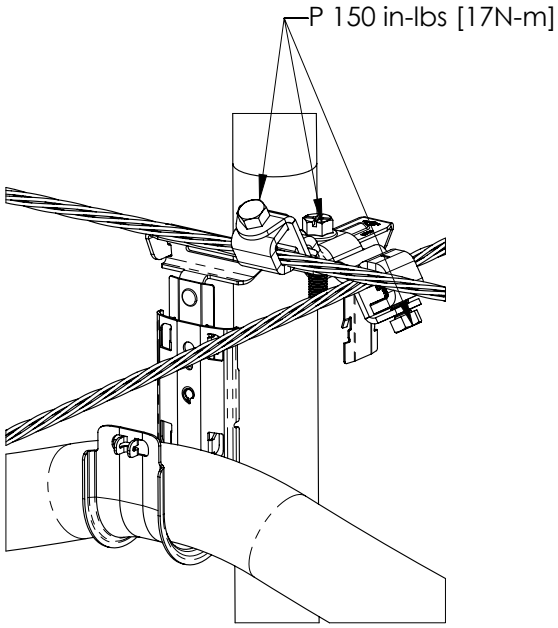

nVent, nVent CADDY, nVent ERICO Cadweld, nVent ERICO Critec, nVent ERICO, nVent ERIFLEX, and nVent LENTON are owned by nVent or its global affiliates. All other trademarks arethe property of their respective owners. nVent reserves the right to change specifications without prior notice.

© 2010-2018 nVent All Rights Reserved