Rail and Industrial Grinding and Cut-off Wheel SBG20046

The Grinding and Cut-off Wheel (SBG20046) from ERICO, is approved for the process of cleaning the rail prior to a CADWELD connection or for removing an existing head bond.

WARNING:
Only ERICO brand of grinding wheels are approved for the CADWELD exothermic welding process. Use SBG20046 on right-angle grinder only. Unapproved wheels may create cracks and/or flaws resulting in a damaged or broken rail.

DANGER:
1) Check all wheels for cracks, damage and/or excessive wear. Do not use wheels which have been dropped, damaged or those which show excessive wear. Discard such wheels immediately.
2) Make sure the operating speed of the machine does not exceed the rated wheel speed. Do not use a grinding wheel with a grinder/grinding tool that can exceed the maximum allowed speed of the grinding wheel. Never operate the wheel above its rated speed.
3) When installing the wheel, tighten nut only enough to hold wheel firmly. Do not use excessive pressure or force when mounting the wheel to avoid wheel damage.
4) Make sure the wheel hole fits properly in the machine arbor and the flanges are clean, flat and properly mounted, per type and size.
5) Always run wheel in a protected area for at least one minute prior to grinding, cleaning or cutting. Handle machine with care, switching if off and storing it in a protective area after use.
6) Always use wheel guard furnished with the machine. Do not operate wheel or machine without safety guard(s) securely mounted in place.
7) Never mount more than one wheel onto a single arbor.
8) Use only proper cutting/grinding surface as indicated on **Fig. 1 (shown here).**
9) Always wear personal protective equipment: gloves, safety glasses and pulmonary mask.
10) Use common sense safety practices that adhere to all local and federal laws and regulations and that comply with ANSI B7.1 Safety Code.
11) Never use a machine or wheel for any inappropriate application.

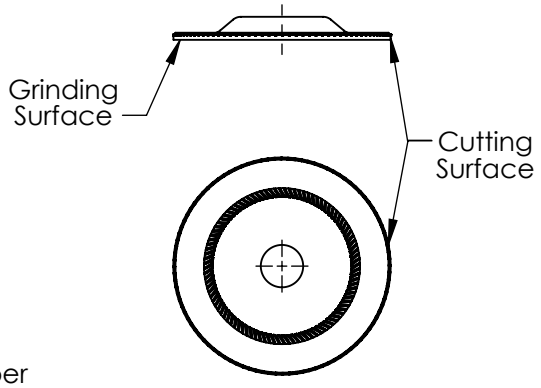

Importance of Proper Machine and Wheel Maintenance
The most common causes of wheel breakage are due to improper mounting, improper speed, abusive operation and/or careless handling. Proper and regular maintenance service and inspection procedures are of great importance in preventing wheel breakage. Regular maintenance service and inspection are the operator's responsibility.

For complete safety information, see ANSI B7.1 Safety Code and relevant material safety data sheet(s).

WARNING:
1. ERICO products shall be installed and used only as indicated in ERICO product instruction sheets and training materials. Instruction sheets are available at www.erico.com and from your ERICO customer service representative.
2. ERICO products must never be used for a purpose other than the purpose for which they were designed or in a manner that exceeds specified load ratings.
3. All instructions must be completely followed to ensure proper and safe installation and performance.
4. Improper installation, misuse, misapplication or other failure to completely follow ERICO's instructions and warnings may cause product malfunction, property damage, serious bodily injury and death.

SAFETY INSTRUCTIONS:
All governing codes and regulations and those required by the job site must be observed.
Always use appropriate safety equipment such as eye protection, hard hat, and gloves as appropriate to the application.

CADDY, CADWELD, CRITEC, ERICO, ERIFLEX, ERITECH, and LENTON are registered trademarks of ERICO International Corporation.

© 2010 ERICO International Corporation