# NVENT CADDY SLICK NUT, POLYAMIDE, SPRING STEEL, 1/2" HOLE, THREADED

## CATALOG NUMBER

**SLICK500**



## FEATURES

Provides fast universal attachment of threaded rod and hardware to standard strut profiles

## PRODUCT ATTRIBUTES

| |
|---|
| Material: Polyamide;Spring Steel |
| Finish: nVent CADDY Armour |
| Hole Size: 1/2" |
| Hole Type: Threaded |
| Height: 11/16" |
| Torque: 10 ft lb |
| Static Load 1: 600 lb |
| Static Load 2: 100 lb |
| Static Load 3: 250 lb |

## ADDITIONAL PRODUCT DETAILS

Indicated loads are independent of the threaded stud or rod.

Indicated loads are applicable on 14 GA and 12 GA (2 mm and 2.5 mm) strut channels only.

## DIAGRAMS

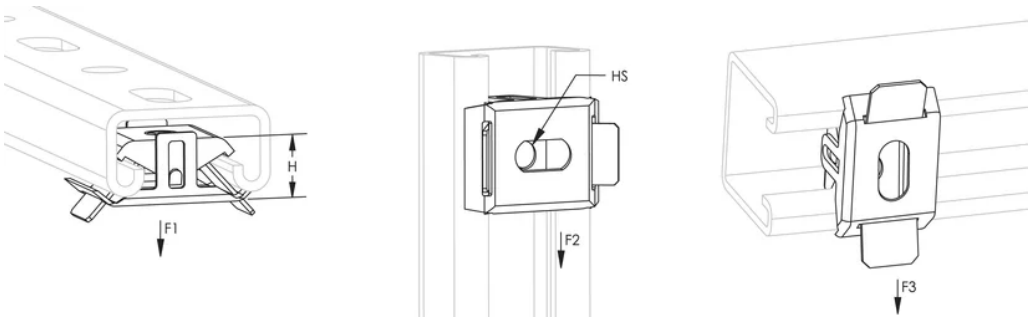


## WARNING

nVent products shall be installed and used only as indicated in nVent's product instruction sheets and training materials. Instruction sheets are available at www.nvent.com and from your nVent customer service representative. Improper installation, misuse, misapplication or other failure to completely follow nVent's instructions and warnings may cause product malfunction, property damage, serious bodily injury and death and/or void your warranty.

**North America**
+1.800.753.9221
Option 1 – Customer Care
Option 2 – Technical Support

**Europe**
Netherlands:
+31 800-0200135
France:
+33 800 901 793

**Europe**
Germany:
800 1890272
Other Countries:
+31 13 5835404

**APAC**
Shanghai:
+ 86 21 2412 1618/19
Sydney:
+61 2 9751 8500

Our powerful portfolio of brands:
nVent.com CADDY ERICO HOFFMAN RAYCHEM SCHROFF TRACER

© 2023 nVent. All nVent marks and logos are owned or licensed by nVent Services GmbH or its affiliates. All other trademarks are the property of their respective owners.

nVent reserves the right to change specifications without notice.