305 STAINLESS STEEL BEAM CLAMP, TOP MOUNT, 1/2" ROD, 5/8" MAX FLANGE

CATALOG NUMBER

305005054



CERTIFICATIONS

FEATURES

- Pressed steel beam clamp
- Structural attachment to top flange of metal beams, purlins, channel, or angle iron
- Conforms with Federal Specification WW-H-171 (Type 23), Manufacturers Standardization Society ANSI®/MSS-SP-58 (Type 19)

PRODUCT ATTRIBUTES

- Material: Stainless Steel 304 (EN 1.4301)
- Rod Size: 1/2"
- Flange Thickness: 5/8" Max
- A: 7/8"
- Screw Diameter: 3/8"
- Screw Length: 1 1/2"
- Torque: 5 ft lb

Static Load: 1,130 lb

ADDITIONAL PRODUCT DETAILS

Set screw must be tightened and torqued onto the sloped side of the I-beam, channel, or angle iron flange.

DIAGRAMS

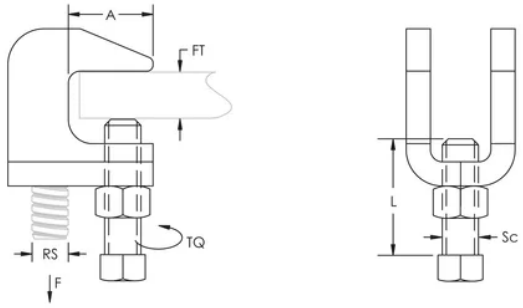

WARNING

nVent products shall be installed and used only as indicated in nVent's product instruction sheets and training materials. Instruction sheets are available at www.nvent.com and from your nVent customer service representative. Improper installation, misuse, misapplication or other failure to completely follow nVent's instructions and warnings may cause product malfunction, property damage, serious bodily injury and death and/or void your warranty.

North America
+1.800.753.9221
Option 1 – Customer Care
Option 2 – Technical Support

Europe
Netherlands:
+31 800-0200135
France:
+33 800 901 793

Europe
Germany:
800 1890272
Other Countries:
+31 13 5835404

APAC
Shanghai:
+ 86 21 2412 1618/19
Sydney:
+61 2 9751 8500

Our powerful portfolio of brands:
nVent.com CADDY ERICO HOFFMAN RAYCHEM SCHROFF TRACER

© 2023 nVent. All nVent marks and logos are owned or licensed by nVent Services GmbH or its affiliates. All other trademarks are the property of their respective owners.

nVent reserves the right to change specifications without notice.