INSTRUCTION SHEET

Mobile Link® Wi-Fi®/Ethernet Device Installation

⚠WARNING

CANCER AND REPRODUCTIVE HARM
www.P65Warnings.ca.gov.

(000393a)

NOTE: Wi-Fi® is a registered trademark of Wi-Fi Alliance®.

Introduction

This unit is equipped with a Mobile Link Wi-Fi/Ethernet device. This instruction sheet explains how to assemble the antenna, connect device power wires to battery, and connect an Ethernet cable (if required).

This instruction sheet must be used in conjunction with all other supporting product documentation supplied with the Mobile Link device and the generator.

See ***Mobile Link installation and user manual***, or scan QR code provided below, to complete device setup, operation, and activation procedures. The instructions listed in the Mobile Link installation and user manual are intended for air-cooled home standby generators. Instructions for liquid-cooled generators are vastly the same, but appearance and locations of some components may vary.

IMPORTANT NOTE: The figures throughout this document show a typical installation on a Protector liquid cooled generator. Overall appearance of generator may vary between models, however instructions for completing installation of Mobile Link Wi-Fi/Ethernet device remain similar.

Installation

Installing the Antenna

Proceed as follows to install the antenna:

IMPORTANT NOTE: Mobile Link device may have become loose during shipping. Verify plastic nut on outside of enclosure is tight. Hold device firmly, and tighten nut until device is secure to panel.

See ***Figure 1***. Thread antenna (A) into Mobile Link device. Rotate antenna clockwise until secure, and position antenna pointing up.

NOTE: Do not overtighten antenna, hand tighten only.

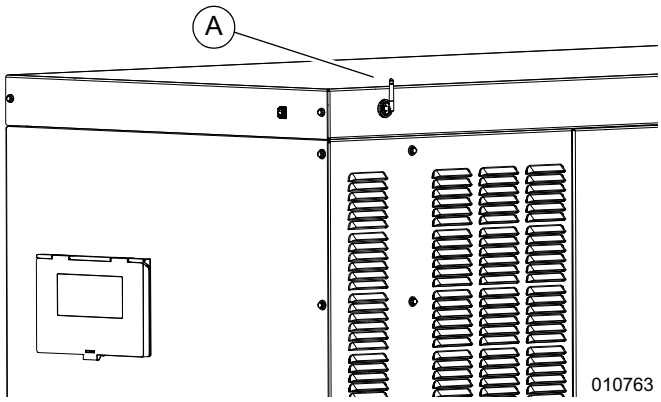

Figure 1. Attach Antenna

Connecting Device Battery Power Wires

⚠WARNING

Accidental Start-up. Disconnect the negative battery cable, then the positive battery cable when working on unit. Failure to do so could result in death or serious injury.

(000130)



⚠CAUTION

Equipment damage. Do not make battery connections in reverse. Doing so will result in equipment damage.

(000167a)

Proceed as follows to connect device battery power wires:

1. Remove battery cables from battery, if installed. Disconnect negative (-) battery cable first, then positive (+) battery cable.

2. Identify the two battery wires from the Mobile Link device harness with the ring terminals located in the engine compartment.

NOTE: Mobile Link device harness power wires consist of a black negative (-) power wire and a fused red positive (+) power wire.

3. See ***Figure 2***. Loosen and remove nuts (A) from positive (+) battery terminal and negative (-) battery terminal screws on the battery cables. Slide harness power wires (B) over battery terminal screws and replace nuts. Tighten securely.

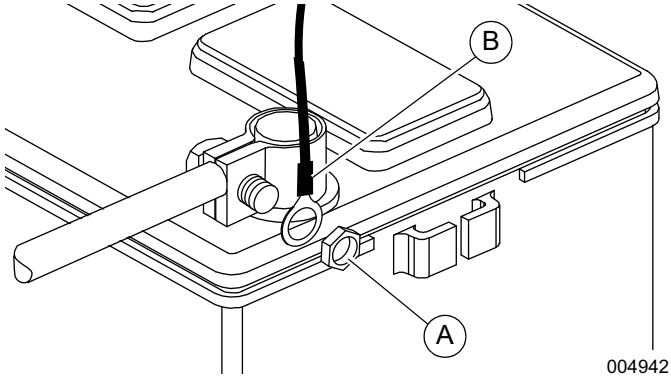

Figure 2. Attach Harness Power Wires

4. Use tie wrap to bundle excess power wire length, if necessary.
5. Connect positive (+) battery cable first, then negative (-) battery cable.

Device Setup / Connecting to Wi-Fi Network

See Mobile Link installation and user manual for instructions on setting up device and connecting to Wi-Fi network. Proceed to ***Installing Ethernet Cable (If Required)*** if Ethernet cable is required.

Installing Ethernet Cable (If Required)

Proceed as follows to install Ethernet cable:

1. See ***Figure 3***. Unit may have a knockout (C) on rear kick plate at unit base (either side). Run Ethernet cable through knockout in kick plate or pull cable through generator installation pad.

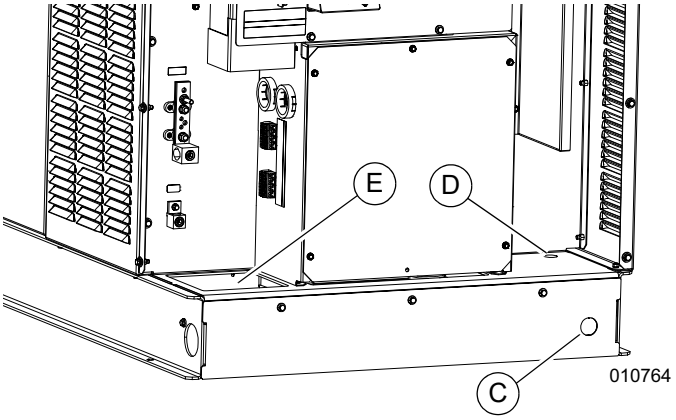

Figure 3. Ethernet Cable Install Locations

2. Pull cable through hole in support rail (D), or through cutout in stub-up area (E) and route upward to plug into device.
3. Use tie wraps to secure Ethernet cable away from any high voltage wires or connections.

Activation

See Registration and Mobile Link Cellular App sections in Mobile Link installation and user manual.

Part No. A0000479091 Rev A 04/29/2020
©2020 Generac Power Systems, Inc.
All rights reserved.
Specifications are subject to change without notice.
No reproduction allowed in any form without prior written consent from Generac Power Systems, Inc.

Generac Power Systems, Inc.
S45 W29290 Hwy. 59
Waukesha, WI 53189
1-888-GENERAC (1-888-436-3722)
www.generac.com