Hammond Power Solutions Inc.

HPS Sentinel™ G

Energy Efficient Distribution Transformer

Transformateur de Distribution à Bon Rendement Énergétique

Hammond Power Solutions

Guelph, ONT Compton, CA

Baraboo, WI Monterrey, MX

Part No. SG3A0500KBOCF

LR 3902

DRY TYPE TRANSFORMER 77US E112313 LISTED

8 03423 16006 7

ALSO VERIFIED IN ACCORDANCE TO ENERGY STANDARD C802.2-18 BY UNDERWRITERS LABORATORIES INC.® 3VJ6

Cust. Ref. Ref. du Client		Serial No. No. de Serie	
Phase	3	HV/HT	480V
Type	K	BIL	10 kV
Cooling Refroidissement	ANN	Term Bornes	H1 H2 H3
kVA	500	LV/BT	208Y/120V
Temp. Rise Echauffement	115 °C	BIL	10 kV
Temp Class Classe Temp	220 °C	Term Bornes	X0 X1 X2 X3
Winding Enroulement	CU	Energy Regulations	DOE 10 CFR PART 431:2016
Frequency Frequence Hz	60	Reglements de Energetique	CEE ACT SOR/2018-201
Impedance % @ 135 °C	5.7		
Encl Type Type De Coffrage	3R		
Weight Poids lbs/kg	3300/1497		

VOLTS	CURRENT COURANT	% RATED VOLTAGE % TENSION NOMINALE	CONNECTION EACH PHASE CONNEXION PAR PHASE
504	573	105	1-2
492	587	102.5	2-3
480	601	100	3-4
468	617	97.5	4-5
456	633	95	5-6
444	650	92.5	6-7
432	668	90	7-8

SPACINGS BETWEEN ANY VENTILATED ENCLOSURE PANEL AND ANY ADJACENT WALL SHALL BE A MINIMUM OF 12 INCHES

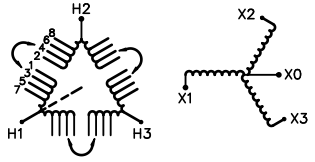

SEISMIC QUALIFICATIONS:
AS FLOOR MOUNT ONLY
IBC 2018/ASCE 7-16
SDS<=2.0g Z/h=0 Ip=1.5

d000186hb

TITLE: 3PH DISTRIBUTION TRANSFORMER NAMEPLATE INFORMATION

NO.	DATE	BY	REVISION
4	21/07/16	PP	EDB UPDATE
3	20/03/17	PP	SEISMIC UPDATE

SCALE: NTS DATE: 16/01/20 DES: RBHATIA

SHEET 1 OF 3

EDB SG3A0500KBOCF

4.0 jwen 2021/07/16 13:30

FRONT VIEW

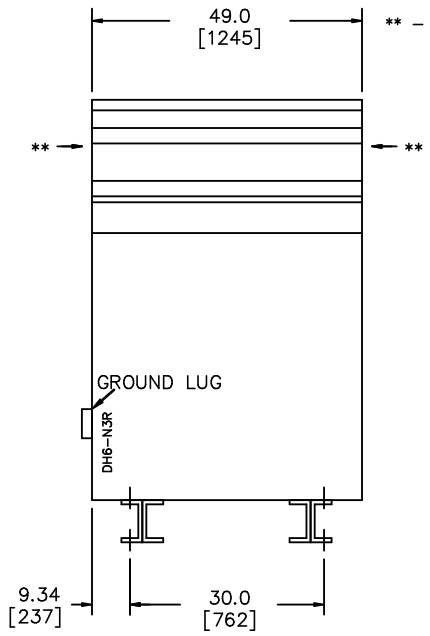

SIDE VIEW

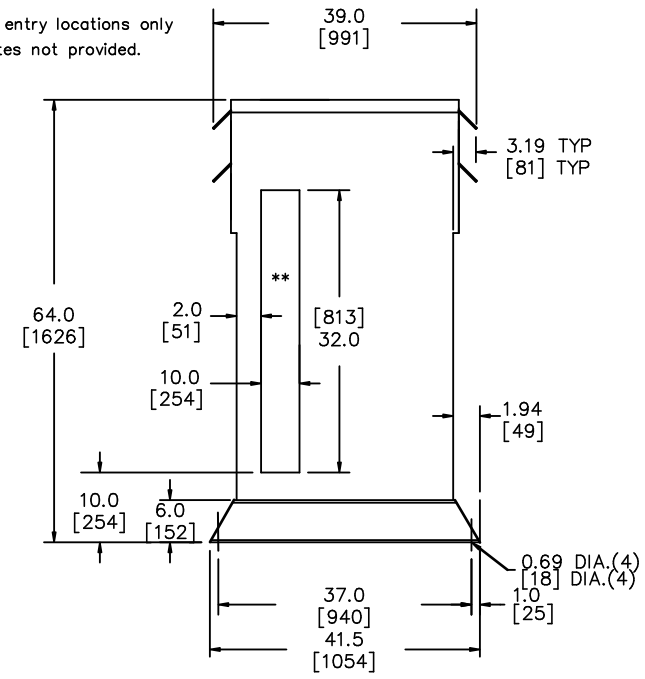

All Dimensions in inches[mm]

ENCLOSURE COLOR : ANSI 61 GREY – OUTDOOR

H.V.1. TERMINAL DETAIL

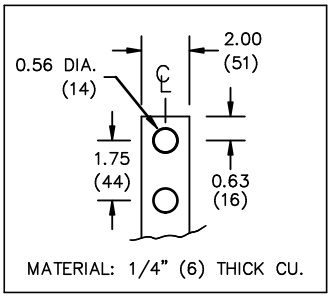

L.V.1. TERMINAL DETAIL

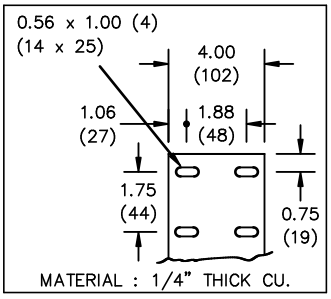

CUSTOMER NOTES:

– HV1 TERMINATED AT TOP FRONT
– LV1 TERMINATED AT BOTTOM FRONT

Hammond Power Solutions Inc.

TITLE: 3PH DISTRIBUTION TRANSFORMER

NO.	DATE	BY	REVISION
4	21/07/16	PP	EDB UPDATE
3	20/03/17	PP	SEISMIC UPDATE

DES: RBHATIA
DATE: 16/01/20
SCALE: NTS

SHEET 2 OF 3

EDB SC3A0500KBOCF

4.0 jwen 2021/07/16 13:30

ENCLOSURE BOTTOM VIEW

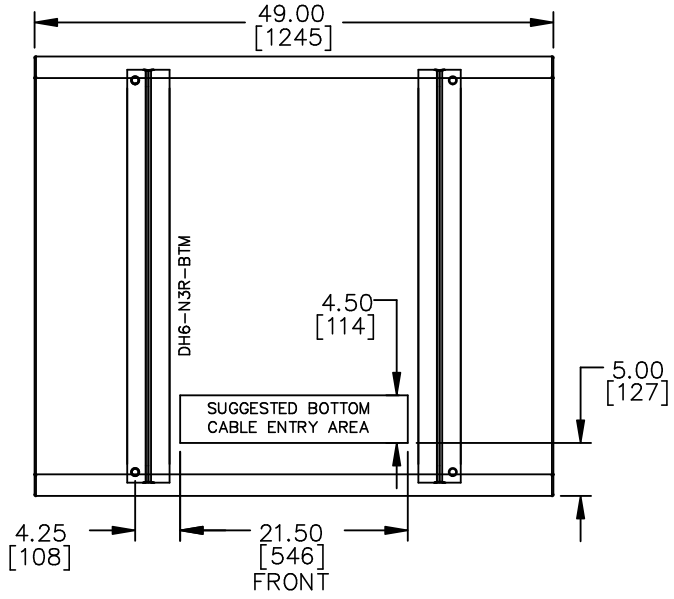

NOTE:
WHEN BOTTOM CABLE ENTRY IS OPTED, THE SPACE USED FOR CONDUITS IN THE FRONT OF THE TRANSFORMER SHOULD NOT OBSTRUCT MORE THAN 50% OF THE FRONT AIR INTAKE AREA DEFINED BETWEEN THE BOTTOM PLATE AND THE SUPPORTING LEGS.
SEE MANUAL FOR ADDITIONAL INFORMATION

Hammond Power Solutions Inc.

TITLE: 3PH DISTRIBUTION TRANSFORMER
ENCLOSURE BOTTOM VIEW

NO.	DATE	BY	REVISION	
4	21/07/16	PP	EDB UPDATE	DES: RBHATIA
3	20/03/17	PP	SEISMIC UPDATE	DATE: 16/01/20
				SCALE: NTS

SHEET 3 OF 3

EDB SC3A0500KBOCF

4.0 jwen 2021/07/16 13:30