Product data sheet
Characteristics

XMLP016BC21FQ
Electronic pressure sensors, Pressure sensors XM, transmitter, XMLP, 16 bar, G1/4 A male, 4...20 mA, DIN, set of 25



Main

Range of Product	OsiSense XM
Product or Component Type	Electronic pressure sensors
Pressure sensor type	Pressure transmitter
Pressure sensor name	XMLP
Electrical circuit type	Control circuit
Pressure sensor size	232.06 psi (16 bar)
Local display	Without
Controlled fluid	Air -22…275 °F (-30…135 °C)) Fresh water 32…275 °F (0…135 °C)) Hydraulic oil -22…275 °F (-30…135 °C)) Gas -22…275 °F (-30…135 °C)) Refrigeration fluid -22…275 °F (-30…135 °C))
Fluid connection type	G 1/4A (male) DIN 3852-E
Electrical connection	1 male connector EN 175301-803-A (ex DIN43650) 3 pins
[Us] rated supply voltage	12...24 V DC SELV 7…33 V)
Current Consumption	< 23 mA
Type of output signal	Analogue
Analogue output function	4...20 mA, 2-wire
Quantity per Set	Set of 25
Type of Packing	Group

Complementary

Pressure setting range	0.00…232.06 psi (0…16 bar)
Maximum permissible accidental pressure	696.18 psi (48 bar)
Destruction pressure	1392.36 psi (96 bar)
Materials in contact with fluid	Stainless steel AISI 316L Fluorocarbon FPM
Operating position	Any position
Protection Type	Load short-circuit Reverse polarity
Electromagnetic compatibility	Electrostatic discharge immunity test EN/IEC 61000-4-2 8 kV air, 4 kV contact 1.2/50 µs shock waves immunity test EN/IEC 61000-4-5 1 kV 42 Ohm Immunity to magnetic fields EN/IEC 61000-4-8 100 A/m 50 Hz Electrical fast transient/burst immunity test EN/IEC 61000-4-4 4 kV Susceptibility to electromagnetic fields EN/IEC 61000-4-3 10 V/m 80...3000 MHz Radiated RF fields EN/IEC 61000-4-6 10 V 0.01...80 MHz
[Uimp] rated impulse withstand voltage	0.5 kV
Response time on output	<= 2 ms 10...90 % of full scale
Measurement accuracy	+/- 0.5 % of the measuring range
Resolution	0.1 % of the measuring range
Drift of the sensitivity	+/- 0.02 % of measuring range/°K
Drift of the zero point	+/- 0.02 % of measuring range/°K
Mechanical durability	10000000 cycles
Net Weight	0.23 lb(US) (0.106 kg)
Diameter	1.02 in (26 mm)
Length	2.39 in (60.6 mm)

The information provided in this documentation contains general descriptions and/or technical characteristics of the performance of the products contained herein.
This documentation is not intended as a substitute for and is not to be used for determining suitability or reliability of these products for specific user applications.
It is the duty of any such user or integrator to perform the appropriate and complete risk analysis, evaluation and testing of the products with respect to the relevant specific application or use thereof.
Neither Schneider Electric Industries SAS nor any of its affiliates or subsidiaries shall be responsible or liable for misuse of the information contained herein.

Environment

Standards	NSF ANSI 61 EN/IEC 61326-2-3
Product Certifications	RCM EAC CE cULus
Protective treatment	TC
Ambient air temperature for operation	-22…185 °F (-30…85 °C)
Ambient Air Temperature for Storage	-58…212 °F (-50…100 °C)
Vibration resistance	20 gn 15…2000 Hz) EN/IEC 60068-2-6
Shock resistance	100 gn 11 ms EN/IEC 60068-2-27
IP degree of protection	IP65 conforming to EN/IEC 60529

Ordering and shipping details

Category	22419-PRESSURE SWITCH IEC (HIGH,LOW,GEN)
Discount Schedule	DS2
GTIN	3389119638838
Nbr. of units in pkg.	1
Package weight(Lbs)	3.25 oz (92.0 g)
Returnability	No
Country of origin	CH

Packing Units

Unit Type of Package 1	PCE
Package 1 Height	1.34 in (3.4 cm)
Package 1 width	1.34 in (3.4 cm)
Package 1 Length	3.39 in (8.6 cm)
Unit Type of Package 2	BB1
Number of Units in Package 2	25
Package 2 Weight	5.53 lb(US) (2.508 kg)
Package 2 Height	5.24 in (13.3 cm)
Package 2 width	7.48 in (19.0 cm)
Package 2 Length	7.64 in (19.4 cm)
Unit Type of Package 3	S02
Number of Units in Package 3	50
Package 3 Weight	11.72 lb(US) (5.318 kg)
Package 3 Height	5.91 in (15.0 cm)
Package 3 width	11.81 in (30.0 cm)
Package 3 Length	15.75 in (40.0 cm)

Offer Sustainability

Sustainable offer status	Green Premium product
California proposition 65	WARNING: This product can expose you to chemicals including: Diisononyl phthalate (DINP), which is known to the State of California to cause cancer, and Di-isodecyl phthalate (DIDP), which is known to the State of California to cause birth defects or other reproductive harm. For more information go to www.P65Warnings.ca.gov
REACh Regulation	REACh Declaration
REACh free of SVHC	Yes
EU RoHS Directive	Pro-active compliance (Product out of EU RoHS legal scope) EU RoHS Declaration
Mercury free	Yes
RoHS exemption information	Yes
Environmental Disclosure	Product Environmental Profile

XMLP016BC21FQ

Dimensions

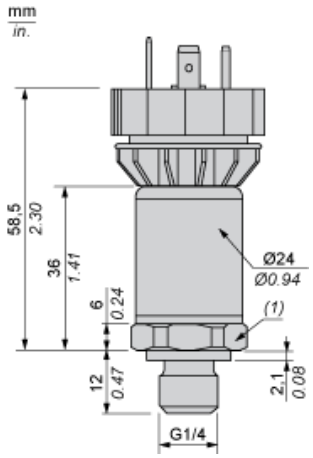

(1) SW24 tightening torque ≤ 25 N.m / 221 lb-in

Wiring Diagram

2-Wire Technique (4-20 mA)

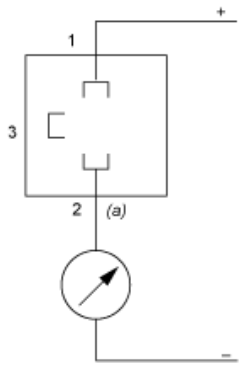

(a) I out

Curves

