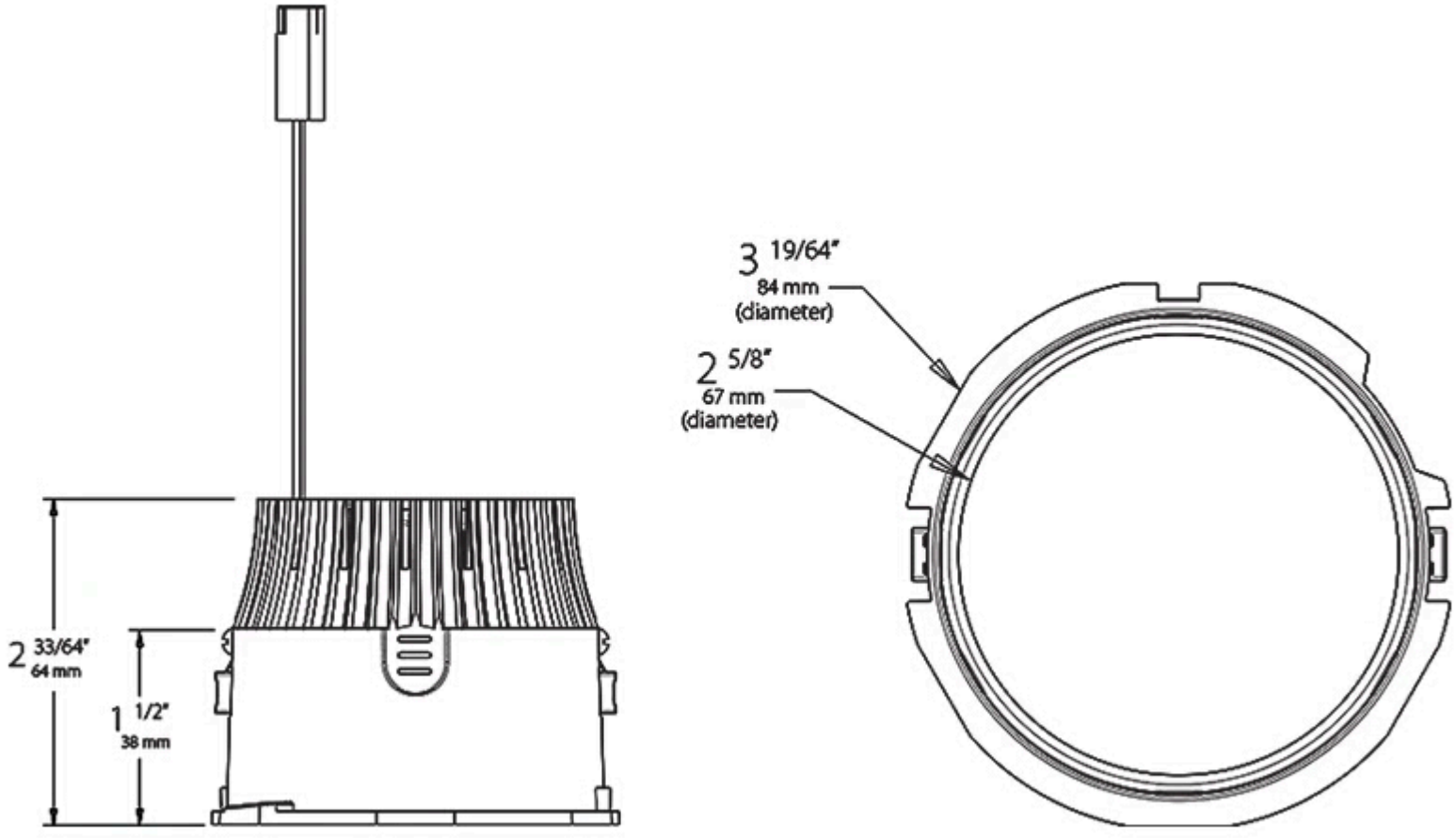
2 33/64"
64 mm
1 1/2"
38 mm
3 19/64"
84 mm
(diameter)
2 5/8"
67 mm
(diameter)