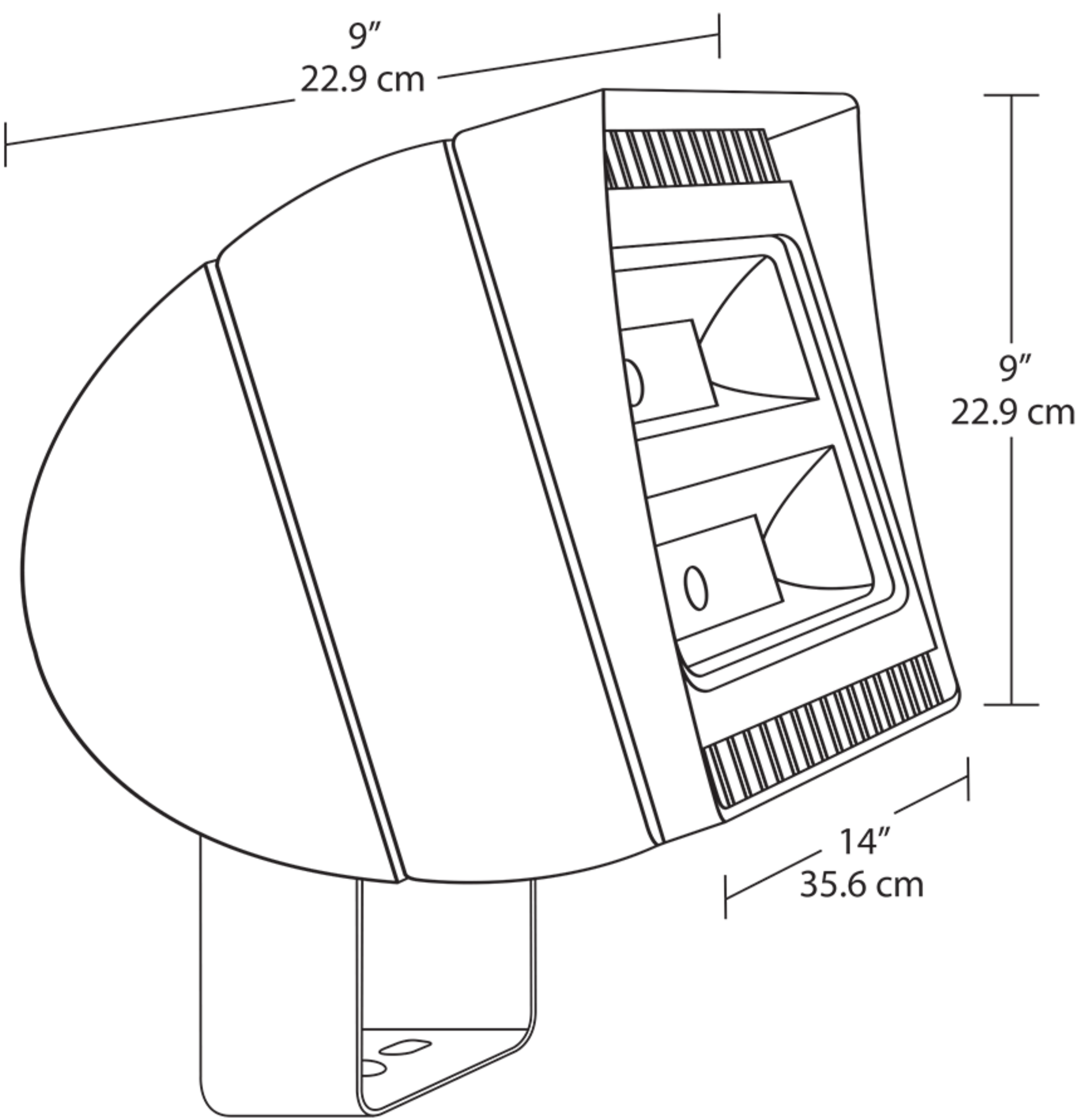
9″
22.9 cm
9″
22.9 cm
14″
35.6 cm