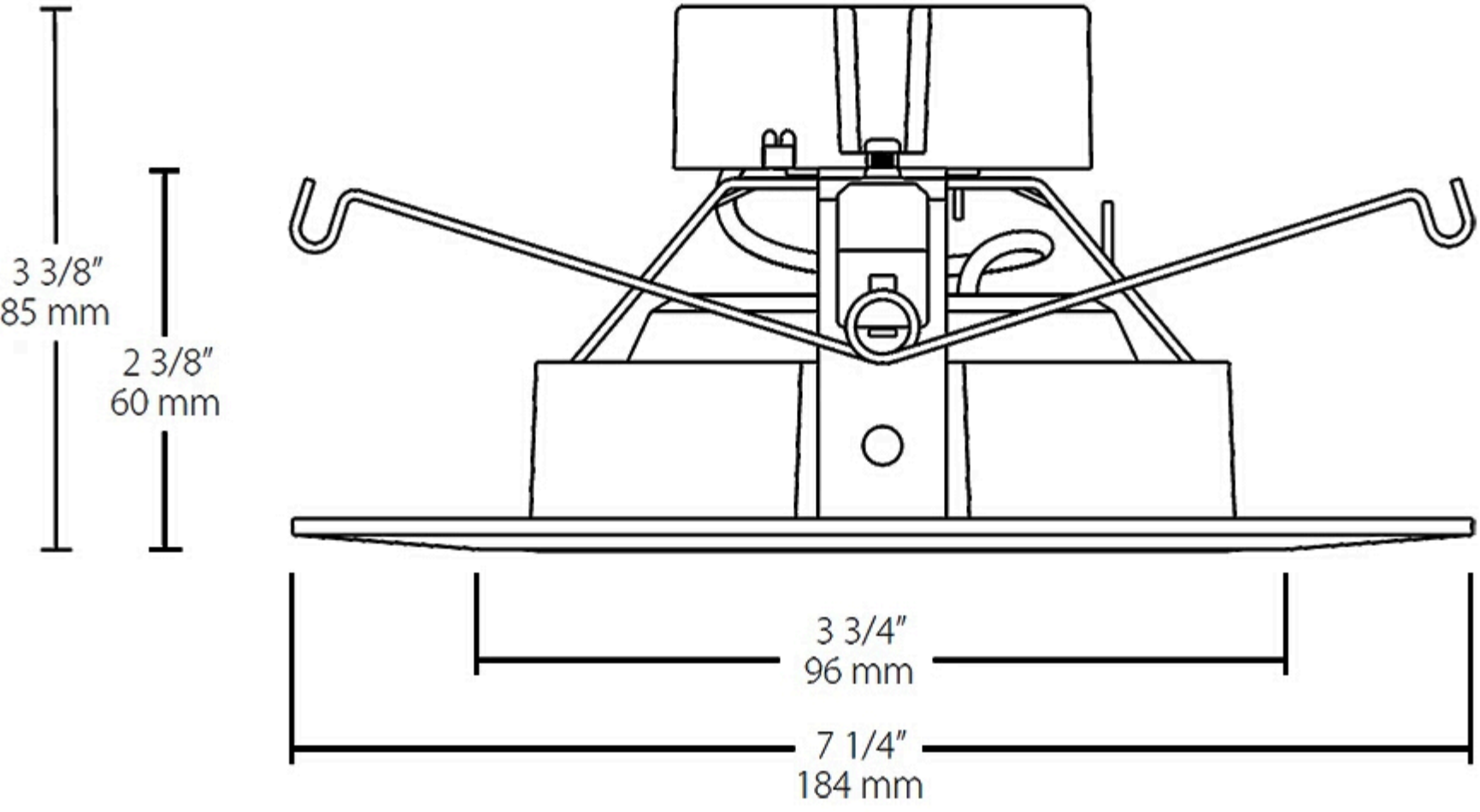
3 3/8"
85 mm
2 3/8"
60 mm
3 3/4"
96 mm
7 1/4"
184 mm